OPTIBELT

TECHNICAL MANUAL
V-BELT DRIVES

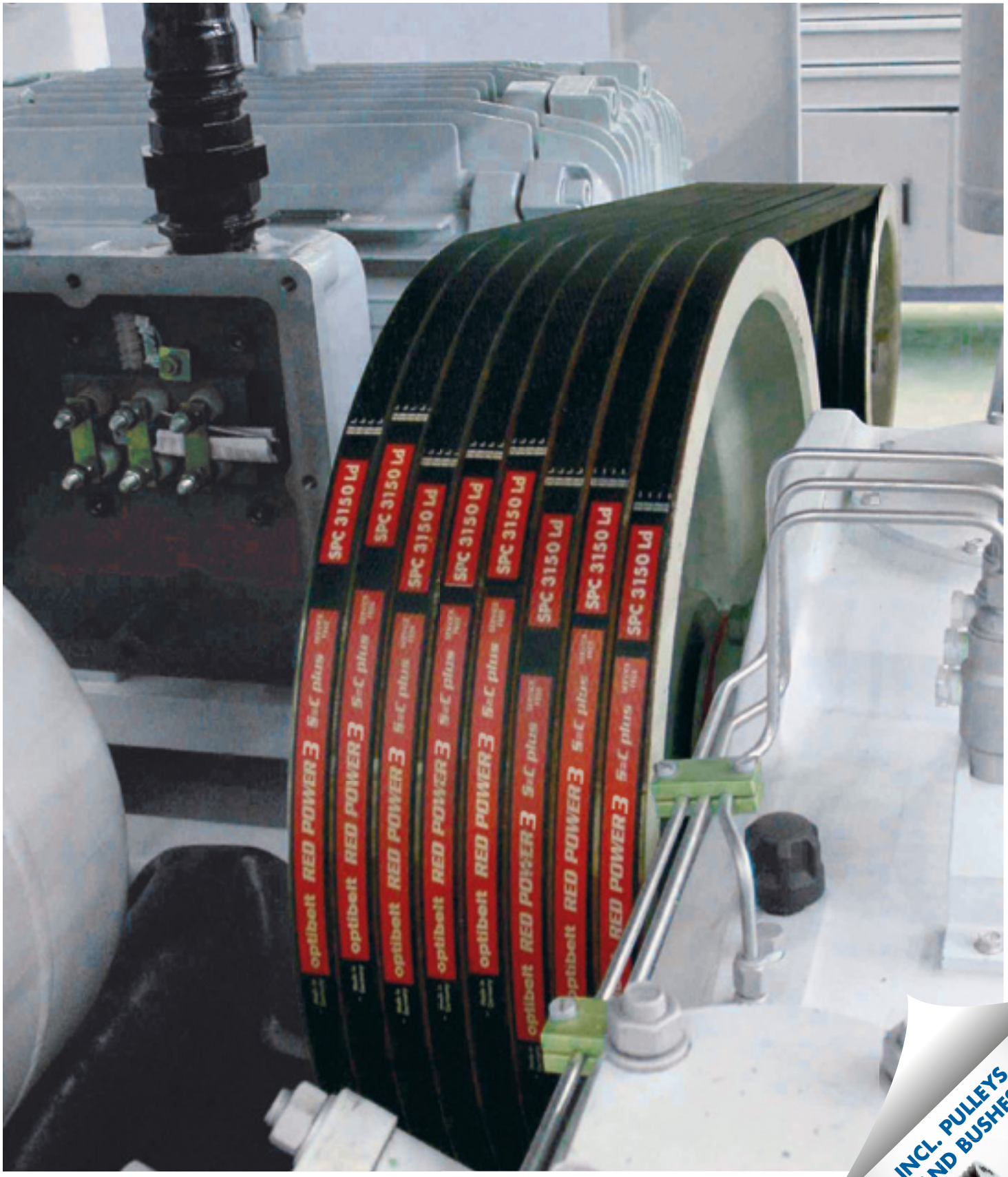

INCL. PULLEYS AND BUSHES

TECHNICAL MANUAL
V-BELT DRIVES

This technical manual contains all important technical information and methods for the design and calculation of drives with Optibelt V-belts and V-grooved pulleys for industrial applications.

Our Application Technology experts offer you free support service regarding the application of our products and also help solve your drive problems.

Especially regarding large volumne you should make use of this service.
We offer you the optimum solution using state-of-the-art programmes, the CAP drive calculation software.

 © ARNTZ OPTIBELT GROUP, GERMANY

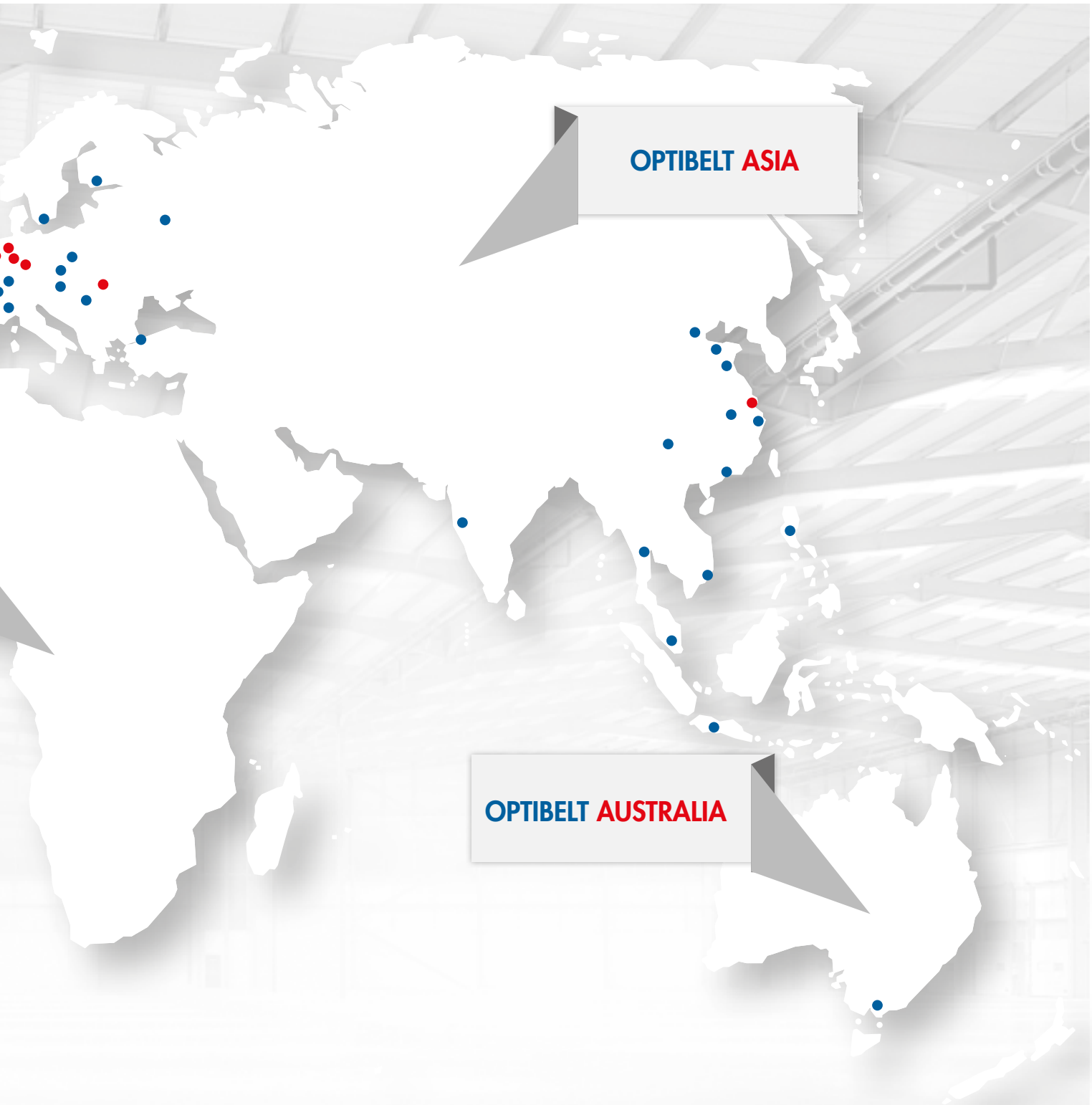

Optibelt AG
www.optibelt.ch

Optibelt (UK) Ltd.
www.optibelt.co.uk

Optibelt France SAS
www.optibelt.fr

Optibelt AG
www.optibelt.it

Optibelt España, S.A.
www.optibelt.es

Optibelt Güc Aktarma Ekipmanlari San. Ve Tic Ltd. Sti.
www.optibelt.com.tr

OOO „Optibelt Power Transmission"
www.optibelt.ru

Optibelt Finland Oy
www.optibelt.fi

Optibelt Skandinaviska AB
www.optibelt.se

Optibelt Corporation
www.optibelt.us

Optibelt Colombia S. A. S.
www.optibelt.com

Optibelt Power Transmission India Pvt. Ltd.
www.optibelt.in

Optibelt Australia Pty Ltd.
www.optibelt.com.au

Optibelt TRANZ Corp.
www.optibelt.co.nz

Optibelt Philippines
www.optibelt.ph

Optibelt Thailand
www.optibelt.co.th

Optibelt Vietnam
www.optibelt.vn

TABLE OF CONTENTS

PRODUCT DESCRIPTION DRIVE BELTS

optibelt RED POWER 3 High Performance Wedge Belts 6
optibelt BLUE POWER High Performance Wedge Belts 7
optibelt SK High Performance Wedge Belts 8-9
optibelt VB Classic V-Belts 10
optibelt KB Kraftbands 11-14
optibelt SUPER X-POWER M=S – Raw Edge, Cogged 15-16
optibelt SUPER E-POWER M=S – Raw Edge, Cogged 17-18
optibelt SUPER TX M=S V-Belts – Raw Edge, Cogged 19
optibelt VARIO POWER Variable Speed Belts – Raw Edge, Cogged/Double-Sided 20
optibelt DK Double-Sided V-Belts 21
Standard Properties 22
Special Constructions 23

STANDARD RANGE DRIVE BELTS

optibelt RED POWER 3 High Performance Wedge Belts, Profiles SPZ, SPA, SPB, SPC, 3V/9N, 5V/15N, 8V/25N 24-25
optibelt BLUE POWER High Performance Wedge Belts, Profiles SPB, SPC, 8V/25N 26
optibelt SK High Performance Wedge Belts, Profiles SPZ, SPA, SPB, SPC, 3V/9N, 5V/15N, 8V/25N 27-28
optibelt VB Classic V-Belts, Profiles 5, Y/6, 8, Z/10, A/13, B/17, 20, C/22, 25, D/32, E/40 29-33
optibelt RED POWER 3 Kraftbands, Profiles SPB, SPC, 3V/9J, 5V/15J, 8V/25J 34-35
optibelt BLUE POWER Kraftbands, Profiles SPB, SPC, 5V/15J, 8V/25J 36-37
optibelt KB Kraftbands, Profiles SPZ, SPA, SPB, SPC, 3V/9J, 5V/15J, 8V/25J
optibelt SUPER KBX-POWER Kraftbands, Profiles 3VX/9JX, 5VX/15JX
optibelt KB Kraftbands, Profiles A/HA, B/HB, C/HC, D/HD 38-41
optibelt SUPER X-POWER M=S Wedge Belts, Profiles XPZ, XPA, XPB, XPC, 3VX/9NX, 5VX/15NX 42
optibelt SUPER E-POWER M=S Wedge Belts, Profiles XPZ, XPA, XPB, XPC, 3VX/9NX, 5VX/15NX 43
optibelt SUPER TX M=S V-Belts, Profiles ZX/X10, AX/X13, BX/X17, CX/X22 44
optibelt VARIO POWER Variable Speed Belts 45-46
optibelt DK Double-Sided V-Belts, Profiles AA/HAA, BB/HBB, CC/HCC, DD/HDD, 22 x 22, 25 x 22 47

PRODUCT DESCRIPTION METAL

optibelt KS V-Grooved Pulleys, optibelt TB Taper Bushes 48
optibelt KS V-Grooved Pulleys, Types 49
optibelt KS V-Grooved Pulleys, Standards – Design Criteria – Types 50

STANDARD RANGE METAL

optibelt KS V-Grooved Pulleys for Wedge Belts and for Classic V-Belts 51-52
optibelt KS V-Grooved Pulleys USA Standard for Wedge Belts 53
optibelt KS V-Grooved Pulleys for Kraftbands 54-55
Optibelt Deep Grooved Pulleys 56
optibelt KS V-Grooved Pulleys for Taper Bushes 57-65
optibelt KS V-Grooved Pulleys for Cylindrical Bores 66-71
optibelt TB Taper Bushes 72

 © ARNTZ OPTIBELT GROUP, GERMANY

TABLE OF CONTENTS

DRIVE CALCULATION

Manual Calculation 73-84
Formulas and Calculation Example 85-87
Calculation with optibelt CAP 88

POWER RATINGS

optibelt RED POWER 3 89-93
optibelt BLUE POWER 94-97
optibelt SK 98-102
optibelt VB 103-113
optibelt SUPER X-POWER M=S 114-117
optibelt SUPER E-POWER M=S 118-121
optibelt SUPER TX M=S 122-125

SPECIAL DRIVES

V-Flat Drives 126-128
optibelt OPTIMAX HF Flat Belts 129-136
Tension/Guide Idlers 137-139
Twist Drives 140-142
Drive Elements with Aramid Structures 143-144

DESIGN SUPPORT

Belt Tension for Optibelt V-Belts and Kraftbands 145-149
Calculating the Axial Load/Shaft Load 150
Technical Tools 151-155
Installation, Maintenance and Storage 157-161
Properties 162-165
Problem – Causes – Remedies 166-167
Length Measurement Conditions and Conversion Factors, Length Tolerances 168-172
Conversion Factors 173-174

CONVEYOR ELEMENTS

Product Description 175
Design Guidelines 176
optibelt KB Kraftbands with Patterned Top Surface 176
optibelt PKR Endless V-Belts and optibelt KB Kraftbands with Patterned Top Surface 177
optimat PKR Open-Ended V-Belts DIN 2216 with Patterned Top Surface 178
optibelt RR Round Belts, optibelt KK Plastic V-Belts and optibelt KK Plastic V-Belts with Patterned Top Surface/Pointed Roof Profile 179

ANNEX

Overview of Standards 180
Data Sheet for the Calculation/Checking of Drives 181-182
Data Sheet for the Calculation/Checking of Conveyor Systems 183-184

PRODUCT DESCRIPTION
optibelt RED POWER 3 HIGH PERFORMANCE WEDGE BELTS

Structure
optibelt RED POWER 3 wedge belts:

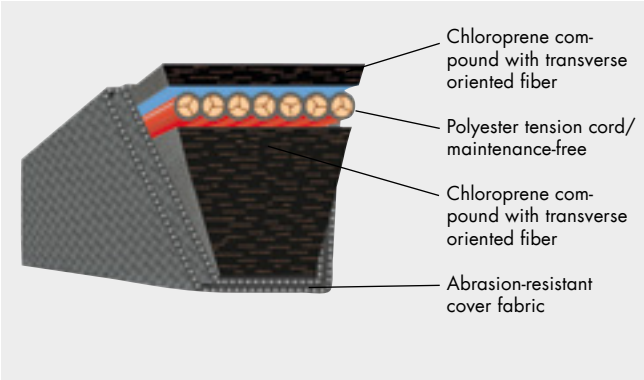

The tension cord consists of a special polyester cord. Due to the special processing of the tension cord the optibelt RED POWER 3 wedge belt is very low-stretch and maintenance-free, so that re-tensioning is not necessary.
The transverse fibre mixture on top of and under the tension cord guarantees a high dynamic load of the belt and ensures great flexibility. The cover fabric is highly flexible and abrasion-proof.

Properties
The optibelt RED POWER 3 is maintenance-free due to the high quality components and the special production method. The production processes are continuously monitored using state-of-the-art static and dynamic testing devices. The optibelt RED POWER 3 is suitable for the application in drives with idler pulleys due to its special construction.

The optibelt RED POWER 3 has the following properties:
- Maintenance-free
- Powerful
- Cost-effective
- S=C Plus usable in sets
- Environmentally friendly
- Electrically conductive according to ISO 1813
- Oil-resistant
- Heat-resistant
- Dust-protected as standard

On request with acceptance test certificate according to EN 1020 "3.1.B".

V-belt tensioning
For the initial installation of optibelt RED POWER 3 V-belts, the same methods are used as for standard Optibelt V-belts. The tension values are to be calculated on the same basis or to be taken from the table on page 146. Once correctly tensioned optibelt RED POWER 3 V-belts need no re-tensioning.

Application areas
optibelt RED POWER 3 wedge belts were especially developed for mechanical engineering. The application areas include compressors, pumps, presses, fans and other heavy duty drives.

Standardisation/Dimensions
optibelt RED POWER 3 wedge belts in the profiles SPZ, SPA, SPB, SPC, 3V/9N, 5V/15N and 8V/25N are standardised according to DIN 7753 Part 1, ISO 4184 and ARPM/MPTA.

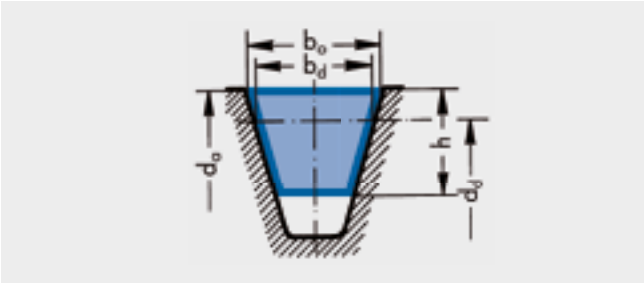

Table 1

Profile			SPZ	SPA	SPB	SPC
Belt top width	b_o	≈	9.7	12.7	16.3	22
Datum width	b_d	≈	8.5	11	14	19
Belt height	h	≈	8	10	13	18
Recommended minimum datum pulley diameter	$d_{d\ min}$		63	90	140	224
Weight per meter (kg/m)		≈	0.074	0.123	0.195	0.377
Flex rate (s^{-1})	$f_{B\ max}$	≈	100			
Belt speed (m/s)	v_{max}	≈	55*			

*v > 55 m/s. Please consult our Application Engineering Department.

Table 2

Profile			3V/9N	5V/15N	8V/25N
Datum width	b_o	≈	9	15	25
Belt height	h	≈	8	13	23
Recommended minimum outside pulley diameter	$d_{a\ min}$		67	151	315
Weight per meter (kg/m)		≈	0.074	0.195	0.575
Flex rate (s^{-1})	$f_{B\ max}$	≈	100		
Belt speed (m/s)	v_{max}	≈	55*		

*v > 55 m/s. Please consult our Application Engineering Department.

 © ARNTZ OPTIBELT GROUP, GERMANY

PRODUCT DESCRIPTION
optibelt BLUE POWER HIGH PERFORMANCE WEDGE BELTS

Structure/Properties
optibelt BLUE POWER wedge belts:

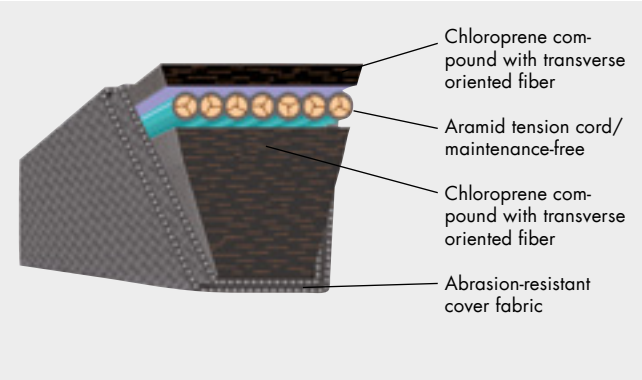

The aramid tension cord has extremely low stretch compared to common materials such as polyester. The breaking strength is almost twice as high with the same cord diameter. Nevertheless, the fibre is extremely flexible.
The high quality specially prepared aramid tension cord is embedded in a rubber compound. It is supported by the top and bottom structures. These consist of a polychloroprene rubber compound with tranverse fibres.
The abrasion-proof cover fabric is coated with a special rubber compound and covers the whole belt. The V-belt is electrically conductive according to ISO 1813

Application areas
optibelt BLUE POWER belts are mainly used when
- highest power transmission levels are required
- there are limited design dimensions
- there is only little installation and tensioning space
- high temperature influences occur

This way, a much better performance is guaranteed e.g. with the same number of belts. Even the operation of once critical drives is now largely free of risk. Higher load limits are now safety zones. Thus optibelt BLUE POWER belts are mainly implemented in heavily loaded drives:
- in critical drives in mechanical engineering
- in special machines
- in agricultural machinery

Application
Attention: When retro-fitting existing drives please let Optibelt check the tension. As part of this description not all criteria can be dealt with. Please consult our Application Engineering Department.

Standardisation/Dimensions
optibelt BLUE POWER wedge belts in the profiles SPZ, SPA, SPB, SPC, 3V/9N, 5V/15N and 8V/25N are standardised according to DIN 7753 Part 1, ISO 4184 and ARPM/MPTA.

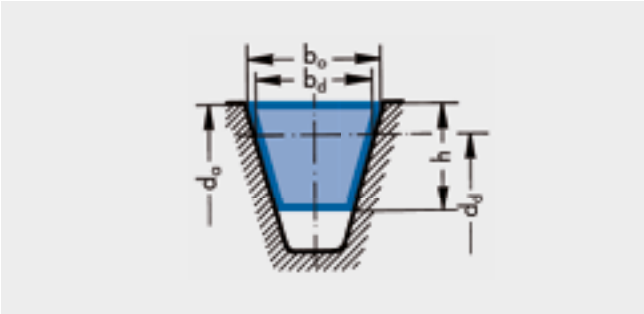

Table 3

Profile			SPB	SPC
Belt top width	b_o	≈	16.3	22
Datum width	b_d	≈	14	19
Belt height	h	≈	13	18
Distance	h_d	≈	3.5	4.8
Recommended minimum datum pulley diameter	$d_{d\ min}$		180	280
Weight per meter (kg/m)		≈	0.206	0.389
Flex rate (s^{-1})	$f_{B\ max}$	≈	100	
Belt speed (m/s)	v_{max}	≈	50*	

*v > 50 m/s. Please consult our Application Engineering Department.

Table 4

Profile			5V/15N	8V/25N
Datum width	b_o	≈	15	25
Belt height	h	≈	13	23
Recommended minimum outside pulley diameter	$d_{a\ min}$		191	315
Weight per meter (kg/m)		≈	0.204	0.603
Flex rate (s^{-1})	$f_{B\ max}$	≈	100	
Belt speed (m/s)	v_{max}	≈	50*	

*v > 50 m/s. Please consult our Application Engineering Department.

PRODUCT DESCRIPTION

optibelt SK HIGH PERFORMANCE WEDGE BELTS DIN 7753 PART 1 / ISO 4184

Structure

optibelt SK high performance wedge belts consist of:

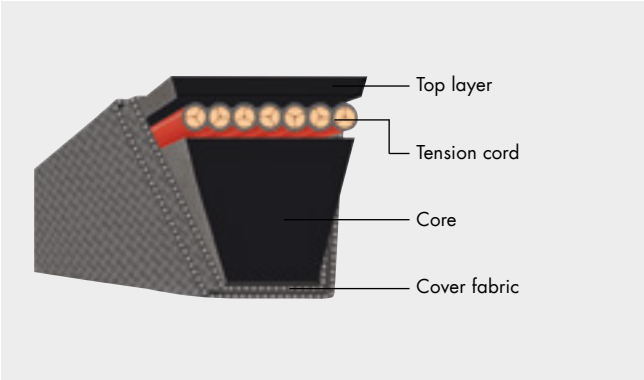

The polyester tension cord is standard for all profiles and cross sections, with cord constructions matching the requirements of each profile. The cord is specially impregnated and then embedded in a special rubber compound homogenously bonding with the top layer and the core.
Due to special processing, the optibelt SK wedge belt is extremely low-stretch. Thus we were able to reduce our recommendation values for minimum axial distance significantly – even dropping below the DIN/ISO requirements.
The fabric cover is treated with a wear-resistant rubber compound. This makes the belt resistant to oil, hot and cold temperatures and to the effects of dust.

Properties

The use of the best materials and the most advanced production methods result in this high performance drive element, the optibelt SK wedge belt. The production processes are continuously monitored using state-of-the-art static and dynamic testing devices.

optibelt SK high power wedge belts exceed classic V-belts according to DIN 2215 thanks to the following characteristics:

- Substantially lower width compared to classic V-belt drives that have the same power rating (height to width ratio of approximately 1 : 1.2). Due to the available space gained by this, the costs for a complete drive with optibelt SK high performance wedge belts are lower than a design with DIN 2215 V-belts.
- Bigger friction surface lowers the centrifugal force and permits belt speeds of up to 42 m/sec.
- Much more elastic, therefore bigger flex rate allowed.
- Little deformation of the belt cross-section when running in grooves, therefore balanced pressure on the belt edges.

These characteristics allow for a significantly better performance than V-belts DIN 2212 with approximately the same top widths. Therefore, we recommend equipping all new drives with optibelt SK wedge belts.

Application areas

optibelt SK wedge belts in the profiles SPZ, SPA, SPB and SPC were specially developed for all industrial applications from lightly loaded drives, such as those for pumps, up to heavily loaded mills and even stone crusher drives.

Standardisation/Dimensions

optibelt SK wedge belts SPZ, SPA, SPB and SPC comply with the standards of DIN 7753 and ISO 4184.
The ISO standards specify the datum width as a basis for the standardisation of V-belts and grooves.
The staggering of the datum lengths is implemented according to DIN 7753 Part 1 corresponding to the standard number sequence R 40. In exceptional cases also corresponding to standard number sequence R 20.
For many years, our product range has comprised serial production datum lengths of standard number sequence R 40 and beyond.

Note: Electrically conductive according to ISO 1813.

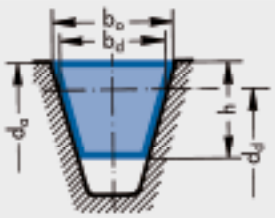

Table 5

Profile			SPZ	SPA	SPB	SPC
Belt top width	b_o	≈	9.7	12.7	16.3	22
Datum width	b_d	≈	8.5	11	14	19
Belt height	h	≈	8	10	13	18
Recommended minimum datum pulley diameter	$d_{d\,min}$		63	90	140	224
Weight per meter (kg/m)		≈	0.074	0.123	0.195	0.377
Flex rate (s^{-1})	$f_{B\,max}$	≈	100			
Belt speed (m/s)	v_{max}	≈	42*			

*v > 42 m/s. Please consult our Application Engineering Department.

 © ARNTZ OPTIBELT GROUP, GERMANY

PRODUCT DESCRIPTION

optibelt SK HIGH PERFORMANCE WEDGE BELTS ARPM/MPTA

Structure/Properties

optibelt SK high performance wedge belts according to ARPM/MPTA have the same structure and properties as wedge belts according to DIN 7753 Part 1.

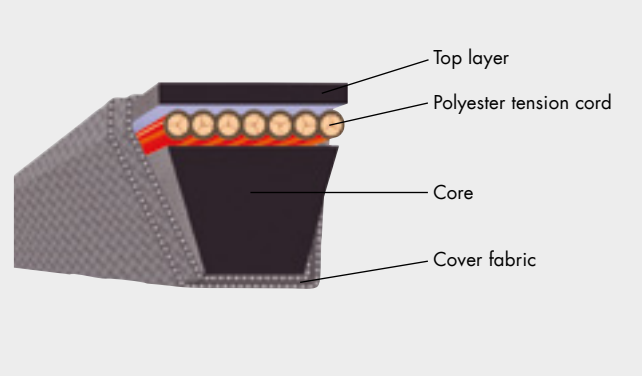

Standardisation/Dimensions

The three wedge belt profiles standardised in the USA are 3V/9N, 5V/15N and 8V/25N. The cross section dimensions of these belts and the according length only partially conform to the profiles and lengths of the wedge belts DIN 7753 Part 1.
The profile 3V/9N roughly corresponds to SPZ; and 5V/15N to profile SPB. There is no comparable DIN/ISO wedge belt profile for 8V/25N. It is possible to use belts in profile 3V/9N and 5V/15N in SPZ-Z/10 or SPB-B/17 pulleys, respectively; but the use of SPZ or SPB belts in ARPM/MPTA standard pulleys is not generally recommended. The top width of the American pulley grooves is smaller than that of the corresponding DIN/ ISO pulleys. This can cause wear on the upper edges of SPZ and SPB belts and can lead to premature failure.
Due to its cross section, the optibelt SK wedge belt in SPB profile is also suitable for 5V/15N pulleys.

Note: Electrically conductive according to ISO 1813.

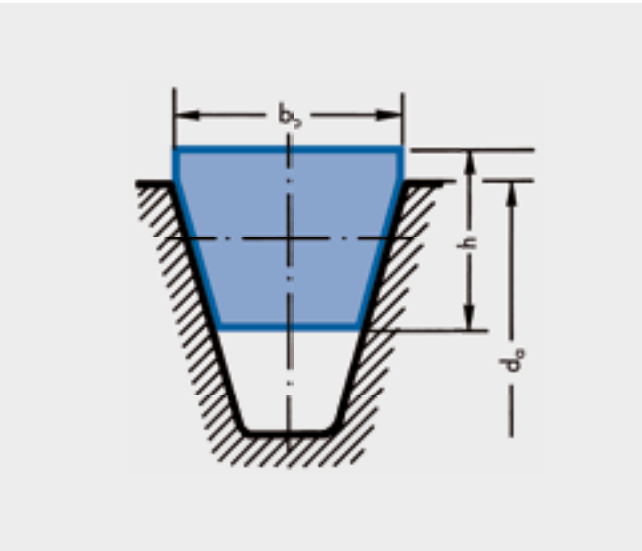

Table 6

Profile			3V/9N	5V/15N	8V/25N
Belt top width	b_o	≈	9	15	25
Belt height	h	≈	8	13	23
Recommended minimum pulley outside diameter	$d_{a\,min}$		67	151	315
Belt weight (kg/m)		≈	0.074	0.195	0.575
Flex rate (s^{-1})	$f_{B\,max}$	≈	100		
Belt speed (m/s)	v_{max}	≈	55*		

*v > 55 m/s. Please contact our Application Engineering Department.

The belt length designation refers to the effective outside length.

Example:

Inch designation	Metric designation
3V 750	9N 1905
3V = profile 3/8" top width	9 ≈ 9 mm top width
750 = outside length in inches : 10 (1 inch = 25.4 mm)	N = designation for single V-belt
Outside length in mm:	1905 = effective outside length
$L_a = \frac{750 \cdot 25.4}{10}$	
L_a = 1905 mm	

Application examples

The use of optibelt SK wedge belt drives in profiles 3V/9N and 5V/15N is recommended for machines exported to countries such as the USA and Canada where these belt profiles are standardised and predominantly used.
Profile 8V/25N is primarily employed in very heavy duty drives such as mills or stone crushers. As these wedge belts transmit very high levels of power, they can sometimes form a more compact drive than the SPC profile.
For this reason, the 8V/25N profile has continued to be used in Europe for such applications. A further advantage is the fact that single wedge belts can be replaced by kraft-bands, without changing the pulley geometry, in case unexpected belt vibration problems develop.

Drive calculation

Drive calculations follow the procedures described in this manual. The power value of the SPZ applies for drives with the 3V/9N profile. The value of the SPB profile applies for 5V/15N. The datum diameters of the SPZ and SPB wedge belts have to be the same as the external diameters of the 3V/9N and 5V/15N. Slight mathematical differences in the rotational frequency and transmission have no practical influence. Slight differences in the theoretical drive speed and the speed ratio are not significant in practice.

PRODUCT DESCRIPTION
optibelt VB CLASSIC V-BELTS
DIN 2215 / ISO 4184

Structure/Properties
optibelt VB classic V-belts are manufactured using the same production processes as those for optibelt SK high performance wedge belts.

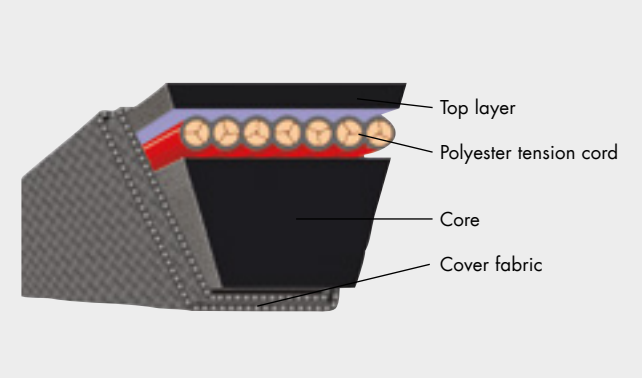

The components used are perfectly suited to the power ratings P_N. These values are far above those given by DIN 2218. Thus the operational safety in existing drives is increased and overloading is avoided.

- optibelt VB classic V-belts have a height-width ratio of 1:1.6.
- The maximum belt speed v_{max} = 30 m/s should not be exceeded.
- The allowed flexibility rate is far below that of wedge belts. It is $f_{B\ max}$ = 80 s^{-1}.

Application areas
optibelt VB classic V-belts are mainly employed as replacement parts for industrial drives. For new drives, the use of high performance wedge belts is almost always recommended due to reasons of space and cost. However, special drives such as V-flat drives can often only be operated with classic V-belts. In special constructions, optibelt VB classic V-belts tackle difficult drives in the gardening sector and in agricultural machinery.

For these applications special belt constructions and calculation methods are required which are not included in this manual. In these cases we ask you to give us the according drive data.

Standardisation/Dimensions
optibelt VB classic V-belts in the profiles Y/6, Z/10, A/13, B/17, C/22, D/32 and E/40 are standardised according to DIN 2215 and ISO 4184.
Further, non-standardised ISO profiles 5, 8, 20 and 25 are available. These profiles should however not be used due to reasons of exchangeability and rationalisation.

The ISO standard 4184 specifies the datum length for measuring the belt length. The former belt designation of the inside length L_i is replaced by the datum length L_d. For the conversion factors from pitch to inside length, please see page 169.

Note: Electrically conductive according to ISO 1813.

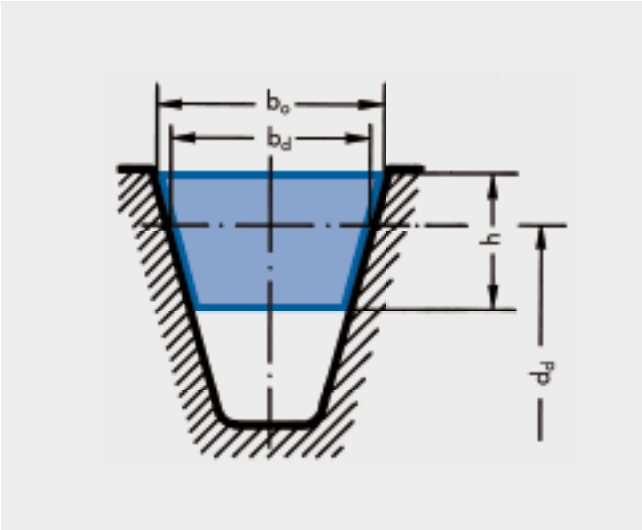

Table 7

Profile	DIN 2215	(5)	6	(8)	10	13	17	(20)	22	(25)	32	40
	ISO 4184	–	Y	–	Z	A	B	–	C	–	D	E
Belt top width	b_o ≈	5	6	8	10	13	17	20	22	25	32	40
Datum width	b_d	4.2	5.3	6.7	8.5	11	14	17	19	21	27	32
Belt height	h ≈	3	4	5	6	8	11	12.5	14	16	20	25
Recommended minimum pulley datum diameter	$d_{d\ min}$	20	28	40	50	71	112	160	200	250	355	500
Belt weight (kg/m)	≈	0.018	0.026	0.042	0.064	0.109	0.190	0.266	0.324	0.420	0.690	0.958
Flex rate (s^{-1})	$f_{B\ max}$ ≈	80										
Belt speed (m/s)	v_{max} ≈	30										

 © ARNTZ OPTIBELT GROUP, GERMANY

PRODUCT DESCRIPTION
optibelt KB KRAFTBANDS

Product characteristics
optibelt KB kraftbands are characterised by the following properties:

- High level of uniform power transmission
- Favourable running behaviour especially regarding vibration
- Excellent flexibility
- High centre distances with small pulley datum diameters
- V-flat drives
- Vertical drives
- Clutched drives and conveyance drives

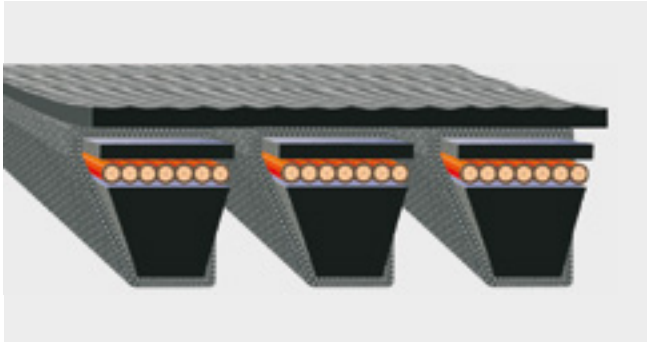

optibelt KB kraftbands consist of individual V-belts that are connected to one another via a top surface. Depending on the application the kraftbands will be fitted with two, three, four or five ribs.
On special request, kraftbands can also be delivered with more than five ribs.
When using multiple kraftbands per drive, combinations of sets are required.

Order example
The drive is to be equipped with a 5V 1600/15J 4064 kraftband with 18 ribs.
Kraftbands: Installation combination with 5/4/4/5 ribs

The order is as follows:
A KB set, consisting of:
2 pieces optibelt KB kraftbands 4-5V 1600/15J 4064 and
2 pieces optibelt KB kraftbands 5-5V 1600/15J 4064
4 or 5 = quantity of ribs
5V/15J = profile
1600 = belt number or 160 inch belt length
4064 = outside length in mm

Standardisation/Dimensions

optibelt KB wedge belts
optibelt KB kraftbands with high power wedge belts are manufactured in SPZ, SPA, SPB, SPC profiles as well as in 3V/9J, 5V/15J, 8V/25J in compliance with international conventions.
SPZ, SPA, SPB and SPC kraftbands can be used with V-grooved pulleys according to DIN 2211 and ISO 4183.
3V/9J, 5V/15J, 8V/25J kraftbands can be used with V-grooved pulleys according to ISO 5290 and ARPM/MPTA IP 22.

optibelt KB classic V-belts
optibelt KB kraftbands with classic V-belts are manufactured in AJ/HA, BJ/HB, CJ/HC, DJ/HD profiles in compliance with international conventions.
The ISO 5291 standard and the ARPM/MPTA IP 20 standard are applied to kraftbands in machine construction.
The ASAE S211. ... USA standard is applied to kraftbands used in agricultural machine construction.

Note: Electrically conductive according to ISO 1813.

PRODUCT DESCRIPTION
optibelt KB KRAFTBANDS

Product design
The optibelt KB kraftbands are used in the most varied constructions according to the technical requirements and applications.

Wrapped kraftbands

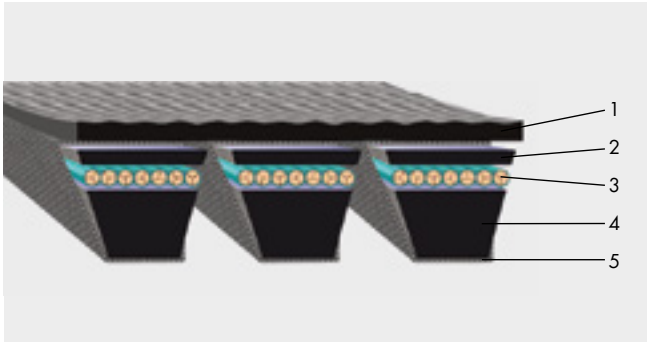

1 Top surface
2 Top layer
3 Polyester tension cord
4 Core
5 Cover fabric

Profiles
3V/9J; 5V/15J; 8V/25J;
SPZ; SPA; SPB; SPC;
A/HA; B/HB; C/HC; D/HD

Dimensions
1200 mm to 12,000 mm
standard range

Application areas
Optibelt wrapped KB kraftbands are primarily used in mechanical engineering and agricultural machines.

optibelt RED POWER 3 high performance kraftbands – wrapped

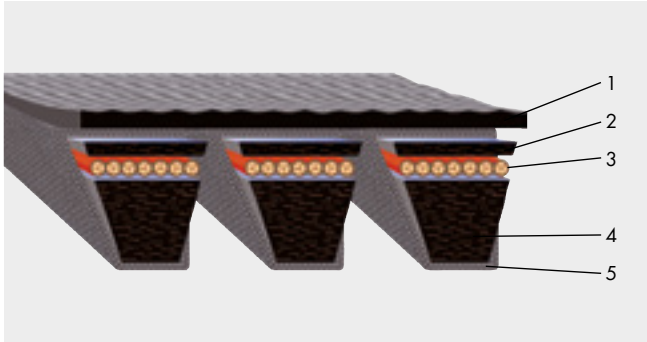

1 Top surface
2 Chloroprene compound with transverse oriented fiber
3 Polyester tension cord, maintenance-free
4 Chloroprene compound with transverse oriented fiber
5 Abrasion-resistant cover fabric

Profiles
3V/9J; 5V/15J; 8V/25J;
SPB; SPC

Dimensions
1270 mm to 12,000 mm
standard range

Application areas
This compact drive element is primarily used for special problem solutions in mechanical engineering and commercial vehicle construction.
We recommend the use of optibelt KB RED POWER 3 for maintenance-free drives and for the use with back bend tension idlers.

 © ARNTZ OPTIBELT GROUP, GERMANY

PRODUCT DESCRIPTION
optibelt KB KRAFTBANDS

High performance kraftbands – raw edge
optibelt SUPER KBX-POWER

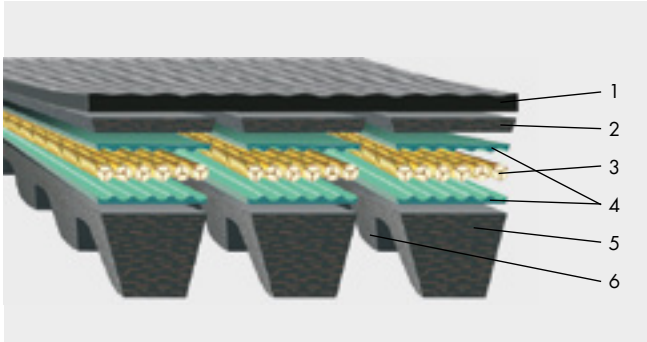

1 Top surface
2 Upper belt structure
3 Polyester tension cord, low maintenance
4 Embedding compound
5 Belt base
6 Moulded cogs

Profiles
3VX/9JX; 5VX/15JX;
XPB
XPZ; XPA on request

Dimensions
1270 mm to 3556 mm
standard range

Application areas
The use of optibelt SUPER KBX-POWER kraftbands is recommended when dealing with compact drive solutions with high power requirements, small pulley datum diameters and for many more special applications in mechanical engineering and vehicle construction.

Kraftbands with aramid cord – wrapped and raw edge

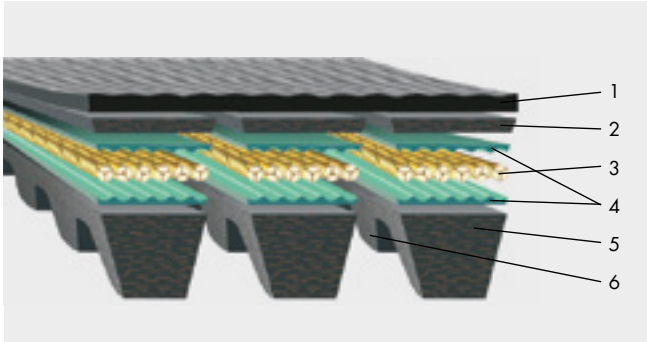

1 Top surface
2 Upper belt structure
3 Aramid tension cord, low maintenance
4 Embedding compound
5 Belt base
6 Moulded cogs

Profiles
3V/9J; 5V/15J; 8V/25J;
SPB; SPC; 5VX/15JX;
A/HA; B/HB; C/HC

Dimensions
1270 mm up to 12,000 mm wrapped kraftbands
1270 mm up to 3556 mm raw edge kraftbands
standard range

Application areas
The advantages of the optibelt KB kraftbands with aramid tension cords become obvious when dealing with heavy loaded drives in mechanical engineering and in the agricultural machine industry. These kraftbands provide the highest possible level of reliability wherever high temperature impacts and low adjustment ranges are present.

PRODUCT DESCRIPTION
optibelt KB KRAFTBANDS

Kraftbands with top coatings

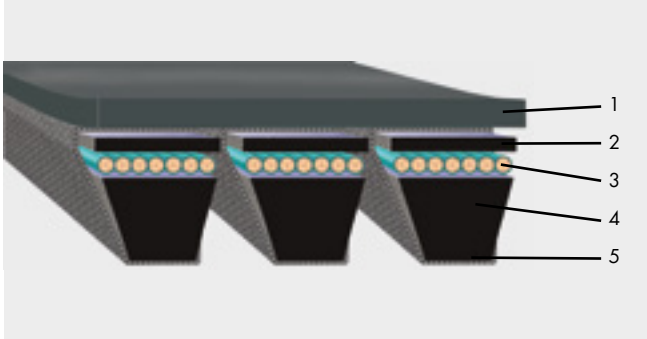

1 PKR top surface
2 Top layer
3 Polyester tension cord
4 Core
5 Cover fabric

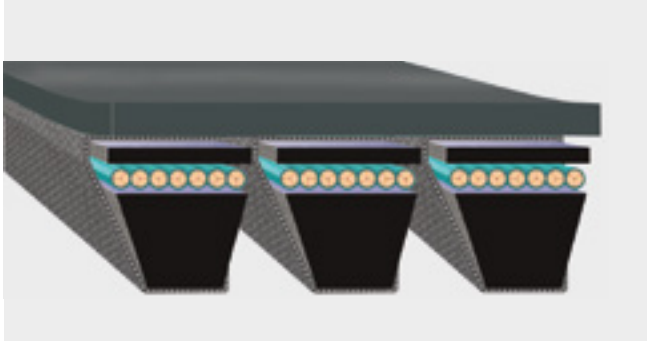

Kraftband
with PKR 0 coating

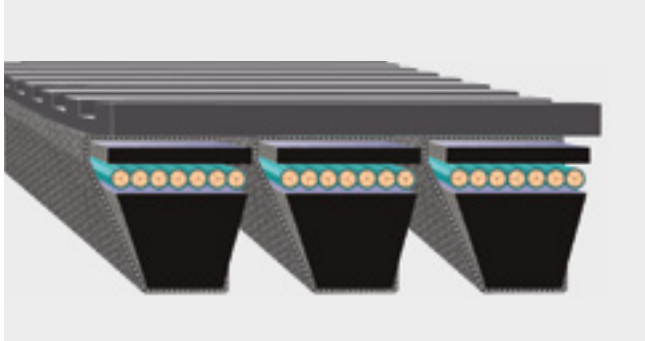

Kraftband
with PKR 1 coating

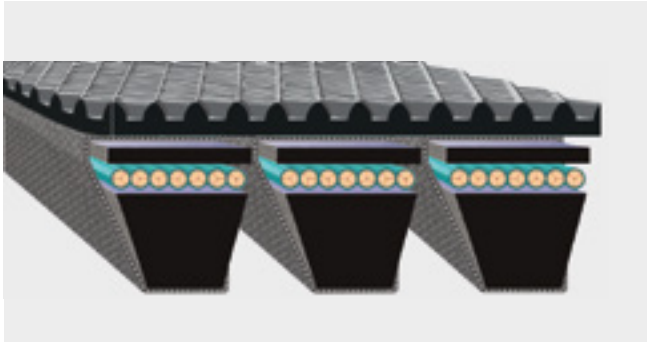

Kraftband
with PKR 2 coating

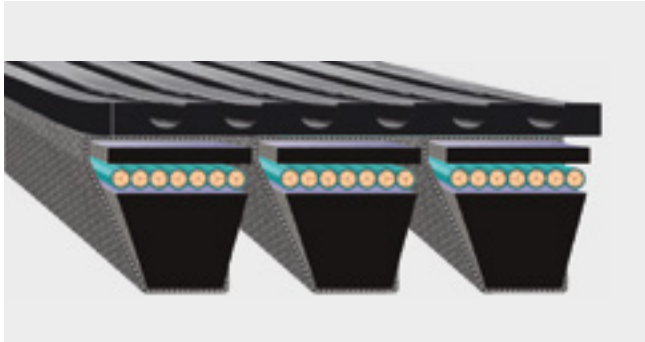

Kraftband
with PKR 3 coating

Application areas
When dealing with conveyance applications, the optibelt KB kraftbands can be provided with an additional coating.
With patterned top surfaces, these kraftbands are suitable for the conveyance of containers, heavy cargo and for diverse transport and shipment equipment.
Further details see chapter "Conveyor elements".

Drive calculation
Drives with optibelt KB kraftbands in mechanical engineering have to be designed according to the stated drive calculation example found on pages 85 to 87 in this manual as well as according to the power values for the according products and profiles.

Special power and tension values apply for Optibelt kraftbands with aramid constructions. Agricultural machine drives will be dimensioned according to special calculation methods. Therefore we request the submission of the technical data.

 © ARNTZ OPTIBELT GROUP, GERMANY

PRODUCT DESCRIPTION

optibelt SUPER X-POWER M=S
RAW EDGE, COGGED – DIN/ISO, ARPM/MPTA

Advantages
optibelt SUPER X-POWER M=S wedge belts are perfectly suited for applications with
- extremely small pulley diameters
- high rotational speeds
- high and low ambient temperatures

optibelt SUPER X-POWER M=S wedge belts offer
- high power transmission
- extremely low stretch
- improved maintenance intervals – low maintenance
- optimised running characteristics – smooth running
- excellent heat and oil resistance
- M=S, for set matching
- electrically conductive according to ISO 1813

Drive ratios i = 1 : 12 are possible with optibelt SUPER X-POWER.

Multi-stage drives can be eliminated.
optibelt SUPER X-POWER M=S wedge belts in profiles XPZ, XPA, XPB, XPC, 3VX/9NX and 5VX/15NX, offer the best technical and economic solutions due to their harmonised premium materials.

Structure/Properties
optibelt SUPER X-POWER M=S consist of:

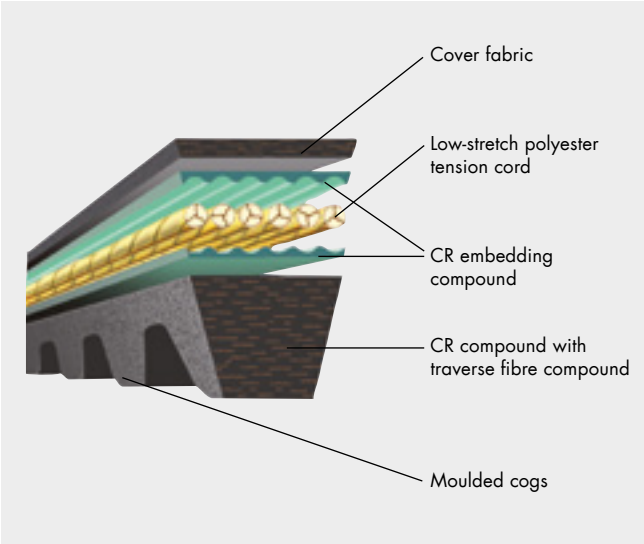

1. The special polyester tension cord of optibelt SUPER X-POWER M=S is extremely low-stretch and allows for maintenance-free drives.
The number of re-tensioning processes is reduced and the drive becomes less expensive in the long term.
2. The structure of the cover fabric supports the tension cord and this is how the optibelt SUPER X-POWER M=S achieves its high level of flexibility.
3. The belt base structure consists of a high performance chloroprene compound, reinforced with a traverse fibre compound.

The special tension cord and the optimum tooth shape allow for higher dynamic power transmissions, improved bending stress and a higher temperature resistance.

As high power transmission is possible, even with small pulley diameters and high engine speed, weight and space can be reduced thus also substantially reducing costs.

Application areas

Machines:
- compressors
- fans
- compactors
- pumps
- wood working machines
- high performance saws
- special machines

Machine tools:
- lathes and drilling machines
- grinding machines

optibelt SUPER X-POWER M=S V-belts are recommended for mechanical engineering applications wherever wrapped V-belts are likely to reach their performance limits.

PRODUCT DESCRIPTION

optibelt SUPER X-POWER M=S

RAW EDGE, COGGED – DIN/ISO, ARPM/MPTA

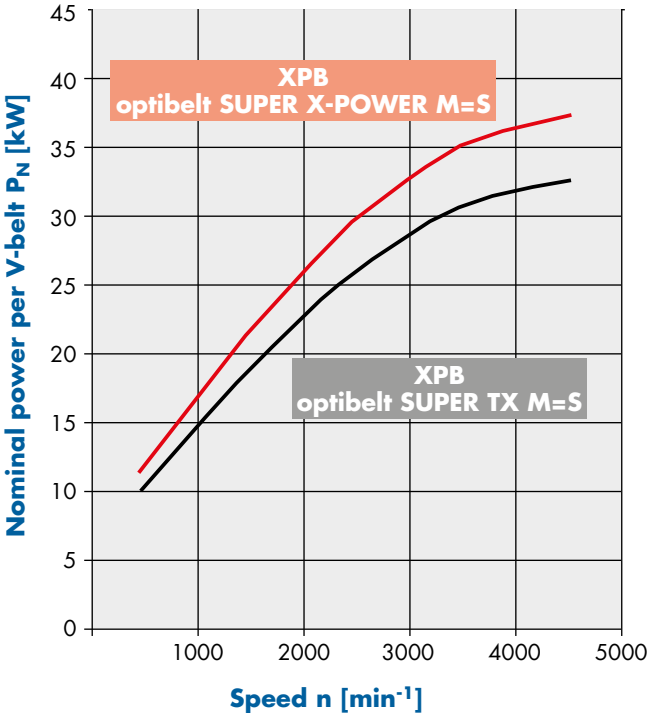

Belt tension / Static shaft load

Belt tension and static shaft load are calculated in the same way as for wrapped belts. When dealing with the same geometric ratios, the shaft load does not exceed that of wrapped belts although the quantity of the belts is often less. Therefore, only the individual V-belt requires higher tension than wrapped belts.
The precise edges of the optibelt SUPER X-POWER M=S V-belt ensure uniform seating in the pulley grooves, resulting in smoother running.

Drive calculation

Drive design using optibelt SUPER X-POWER M=S belts should be carried out according to the examples given on pages 85 to 87. The higher power ratings given in the relevant tables, apply. These are based on a theoretical laboratory running time of 25,000 hours.

Standardisation/Dimensions

The cross sections and dimensions of optibelt SUPER X-POWER M=S V-belts are in accordance with DIN 7753 Part 1, DIN 2215, ISO 4184 and ARPM/MPTA.
The basis for the length measurement is the datum length (L_d) to DIN/ISO.

Table 8

Profile	Top belt width b_o ≈	Datum width b_d	Belt height h ≈	Meter weight [kg/m] ≈
XPZ	9.7	8.5	8	0.065
XPA	12.7	11.0	10	0.105
XPB	16.3	14.0	13	0.183
XPC	22.0	19.0	18	0.340
3VX/9NX	9.0	–	8	0.065
5VX/15NX	15.0	–	13	0.183

V-grooved pulleys

optibelt SUPER X-POWER M=S are used with pulleys according to DIN 2211, DIN 2217, ISO 4183 and ARPM/MPTA. Considerably smaller minimum pulley datum diameters are allowed.

Table 9

Recommended minimum pulley diameter [mm] wedge belt			
Profile	Raw edge, cogged	Profile	Wrapped
XPZ	56	SPZ	63
XPA	71	SPA	90
XPB	112	SPB	140
XPC	180	SPC	224
3VX/9NX	56	3V/9N	67
5VX/15NX	112	5V/15N	151

 © ARNTZ OPTIBELT GROUP, GERMANY

PRODUCT DESCRIPTION

optibelt SUPER E-POWER M=S

RAW EDGE, COGGED – DIN/ISO, ARPM/MPTA

EPDM

Advantages

optibelt SUPER E-POWER M=S wedge belts are perfectly suited for complex applications which require the highest capacities under the most severe conditions such as with

- extremely small pulley diameters
- high rotational speeds
- high and low ambient temperatures

optibelt SUPER E-POWER M=S wedge belts offer

- high power transmission, up to 20 % better performance
- extremely high capacity and extremely low stretch
- optimised extremely smooth running characteristics
- optimised operational life and operating times
- improved maintenance intervals and low service expenditures (low maintenance)
- excellent temperature resistance from –40 °C to +120 °C
- M=S, for set matching
- electrically conductive according to ISO 1813 and compatible with ATEX

Structure/Properties

optibelt SUPER E-POWER M=S consist of:

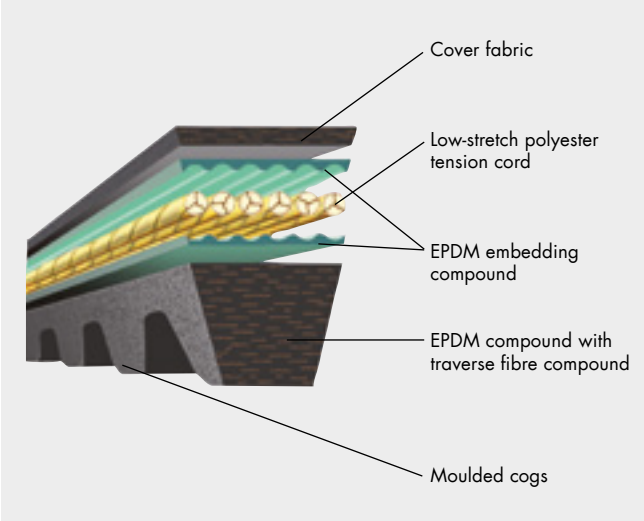

1. The highly modular polyester tension cord of the optibelt SUPER E-POWER M=S is very low-stretch and thus allows for a low maintenance drive. The number of re-tensionings is reduced; the drive is more cost-effective in the long term.
2. The structure of the cover fabric supports the tension cord and this is how the optibelt SUPER E-POWER M=S achieves its high level of flexibility.
3. The belt base structure consists of a high performance EPDM compound, reinforced with a traverse fibre compound. The special tension cord and the optimised rubber compound allow for a higher power transmission level, less flexing stress and better heat dissipation.

optibelt SUPER E-POWER M=S

The use of the optibelt SUPER E-POWER M=S allows for high power transmissions even with small pulley diameters and high engine speed. Thus, weight and space can be reduced, also additionally reducing costs.

Application areas

Machines:

- compressors
- fans
- compactors
- pumps
- wood working machines
- high performance saws
- special machines

Machine tools:

- lathes and drilling machines
- grinding machines

In mechanical engineering, wrapped V-belts are often employed in fringe areas and might wear out soon. In order to prevent downtimes, we recommend using optibelt SUPER E-POWER M=S.

optibelt SUPER E-POWER available on request

PRODUCT DESCRIPTION

optibelt SUPER E-POWER M=S

RAW EDGE, COGGED – DIN/ISO, ARPM/MPTA

optibelt SUPER E-POWER available on request

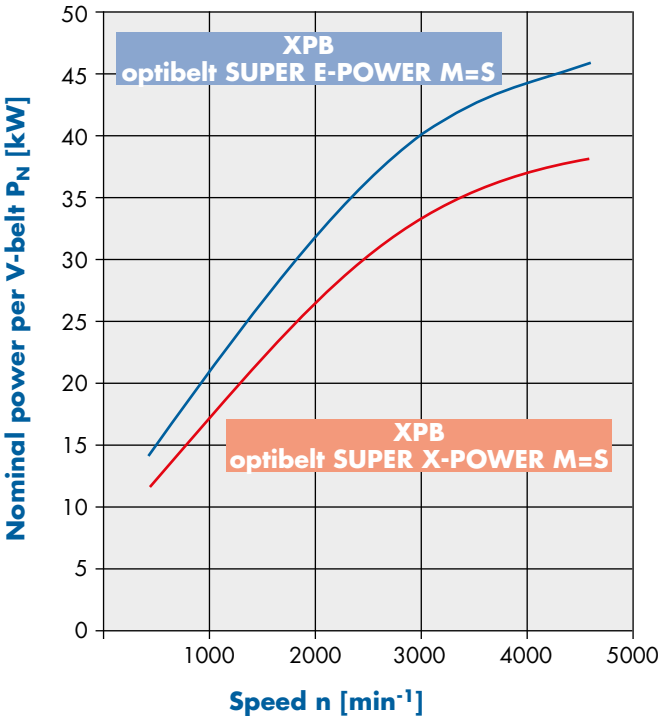

Belt tension / Static shaft load

Belt tension and static shaft load are calculated the same way as for wrapped belts. When dealing with the same geometric ratios, the shaft load does not exceed that of wrapped belts although the quantity of the belts is often less. Therefore, only the individual V-belt requires higher tension than wrapped belts.
The precise edges of the optibelt SUPER E-POWER M=S V-belt ensure uniform seating in the pulley grooves, resulting in smoother running.

Test results

optibelt SUPER E-POWER M=S exhibit a considerably improved tension retention when compared to the common raw edge, cogged construction.

Comparison test: **Tension retention [N]**,
Power P = 13.0 kW, n_1 = 4700 min^{-1}

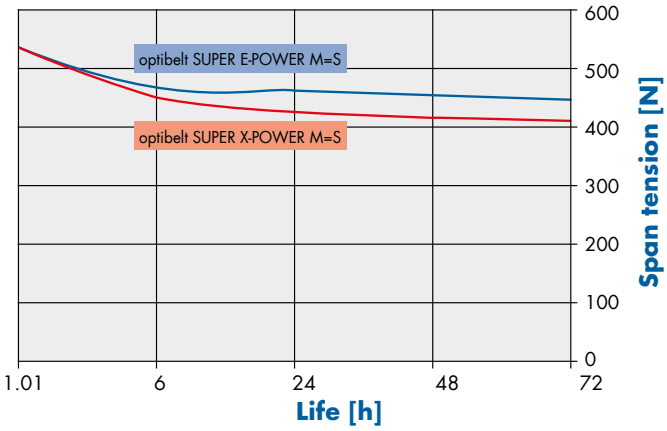

Drive calculation

Drive design using optibelt SUPER E-POWER M=S belts should be carried out according to the examples given on pages 85 to 87. The higher power ratings given in the relevant tables, apply. These are based on a theoretical laboratory running time of 25,000 hours.

Standardisation/Dimensions

The cross sections and dimensions of optibelt SUPER E-POWER M=S V-belts are in accordance with DIN 7753 Part 1, DIN 2215, ISO 4184 and ARPM/MPTA.
The basis for the length measurement is the datum length (L_d) to DIN/ISO.

Table 10

Profile	Top belt width b_o ≈	Datum width b_d	Belt height h ≈	Meter weight [kg/m] ≈
XPZ	9.7	8.5	8	0.065
XPA	12.7	11.0	10	0.105
XPB	16.3	14.0	13	0.183
XPC	22.0	19.0	18	0.340
3VX/9NX	9.0	–	8	0.065
5VX/15NX	15.0	–	13	0.183

V-grooved pulleys

optibelt SUPER E-POWER M=S are used with pulleys to DIN 2211, DIN 2217, ISO 4183 and ARPM/MPTA. Considerably smaller minimum pulley datum diameters are allowed.

Table 11

Recommended minimum pulley diameter [mm] wedge belt			
Profile	Raw edge, cogged	Profile	Wrapped
XPZ	56	SPZ	63
XPA	71	SPA	90
XPB	112	SPB	140
XPC	180	SPC	224
3VX/9NX	56	3V/9N	67
5VX/15NX	112	5V/15N	151

 © ARNTZ OPTIBELT GROUP, GERMANY

PRODUCT DESCRIPTION
optibelt SUPER TX M=S V-BELTS
RAW EDGE, COGGED – DIN/ISO, ARPM/MPTA

The advantages of optibelt SUPER TX M=S V-belts can best be seen when dealing with
- extremely small pulley diameters
- high rotational speeds
- extremely high power requirements
- higher ambient temperatures

In these cases the use of wrapped V-belts is uneconomic and not recommended.

optibelt SUPER TX M=S V-belts in profiles ZX/X10, AX/X13, BX/X17 and CX/X22 offer the best technical and economic solutions under these conditions due to their high quality perfectly harmonised materials.

Structure/Properties
optibelt SUPER TX M=S consist of:

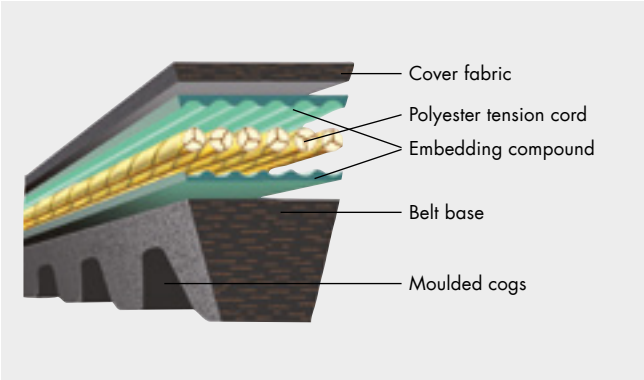

The belt base consists of a polychloroprene rubber compound with traverse fibres which support the tension cord.

This results in
- significant flexing rate
- extreme traverse stability
- significantly improved wear resistance and slip resistance
- electrically conductive according to DIN 1813
- low stretch

The specially prepared tension cord is embedded in a special compound. Even with high dynamic loads a perfect adhesion between all components is assured.
The fabric layers of the upper structure support the tension cord. The fibre-reinforced substructure combined with the Optibelt tension cord and the moulded cogs allows for a higher dynamic power transmission.
The moulded cogs decrease the flexing resistance, resulting in an excellent flexing rate. Thus, much smaller pulleys can be used compared to common wrapped V-belts.

optibelt SUPER TX M=S allows for drive ratios i = 1:12. Multi-stage drives can be eliminated.

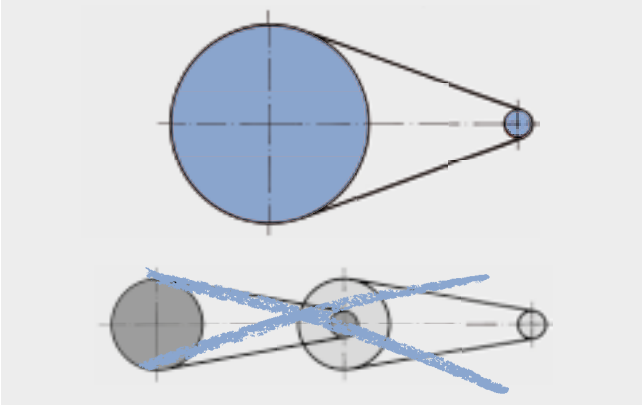

Due to the use of high quality polychloroprene rubber compounds, the optibelt SUPER TX M=S has a higher oil and heat-resistance than wrapped V-belts.
As high power transmission is possible, even with small pulley diameters and high engine speed, weight and space can be reduced thus also substantially reducing costs.

Drive calculation
Drive design using optibelt SUPER TX M=S belts should be carried out according to the examples given on pages 85 to 87. The higher power ratings given in the relevant tables, apply. These are based on a theoretical laboratory running time of 25,000 hours.

V-grooved pulleys
optibelt SUPER TX M=S are used with pulleys to DIN 2211, DIN 2217, ISO 4183 and ARPM/MPTA. Considerably smaller minimum pulley datum diameters are allowed.

Table 12

Recommended minimum pulley diameter [mm] V-belts			
Profile	Raw edge, cogged	**Profile**	Wrapped
ZX/X10	40	**Z/10**	50
AX/X13	63	**A/13**	71
BX/X17	90	**B/17**	112
CX/X22	140	**C/22**	180

Profile	Top belt width b_o ≈	Datum width b_d	Belt height h ≈	Meter weight [kg/m] ≈
ZX/X10	10	8.5	6	0.062
AX/X13	13	11	8	0.099
BX/X17	17	14	11	0.165
CX/X22	22	19	14	0.276

PRODUCT DESCRIPTION

optibelt VARIO POWER VARIABLE SPEED BELTS RAW EDGE, COGGED / DOUBLE-SIDED – DIN 7719 / ISO 1604

optibelt VARIO POWER variable speed belts – raw edge, cogged

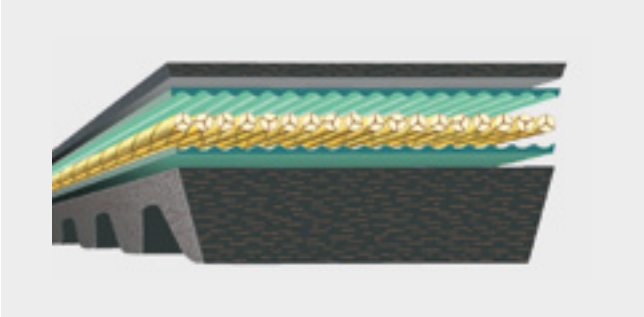

Increasing demands on variable speed belts due to the continuous increase of power transmission levels initiated the development of the raw edge, cogged variable speed belts.
The base compound consists of a polychloroprene rubber compound with traverse fibres. The high quality and extremely low-stretch polyester or aramid tension cord is embedded in a rubber compound. It is effectively supported by an upper and substructure. The special characteristics of the raw edge, cogged variable speed belt are:

- high power transmission
- excellent flexibility in running direction
- high traverse stability
- exceptionally smooth running
- wear and slip resistance
- long operational life
- electrically conductive according to ISO 1813

Profiles
Belt widths of up to 100 mm
Belt heights of 5-25 mm

Dimensions
Lengths up to 5000 mm
Standardised dimensions to BS/DIN/ISO and ARPM/MPTA

Application areas

Industrial machinery:	special drives
Variable speed drives:	compact units
Printing machinery:	multi-colour offset drives
Gearboxes:	variable diameter pulley sets
Agricultural machinery:	thresher drum drives
Textile machinery:	winding machinery
Machine tools:	lathes
Automotive technology:	snowmobile drives

optibelt VARIO POWER variable speed belts – raw edge, Double-sided

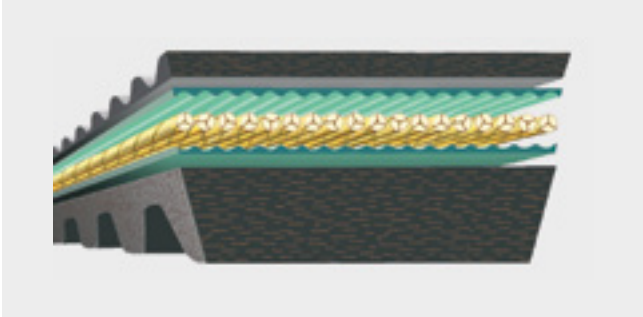

Further increases in demand on the performance of drive elements and the trend towards designing ever smaller, space saving drive units, led to the development of the Double-sided, raw edge optibelt VARIO POWER variable speed belt.
Double-sided Optibelt variable speed belts allow for the smallest pulley diameters, even below standard recommendations. The Double-sided design improves heat emission, thereby significantly reducing the belt running temperature. The production methods and the structure of the belt have been derived from the raw edge optibelt VARIO POWER variable speed belt. Depending upon the application and application range, this belt can also be equipped with layers of special cross-cord material in the base compound. The belt is Double-sided, with the depth and spacing of the cogs matching with the specific belt profile. The polyester or aramid tension cord ensures ideal power transmission, increased service life, and extremely low-stretch characteristics.
The features of the optibelt VARIO POWER variable speed belt can be summarised as follows:

- extremely high acceptance of axial loads
- high flexibility and flexing rate
- better heat emission
- use with small pulley diameters
- high running smoothness with high belt speeds
- long operational life
- electrically conductive according to ISO 1813

Profiles
Belt widths of 20-85 mm
Belt heights of 10-30 mm

Dimensions
Length ranges from 600-3500 mm
Profiles and dimensions following DIN/ISO and ARPM/MPTA

optibelt VS variable speed belts – wrapped

The optibelt VS is the first generation of variable speed belts. Its structure complies with the standard constructions of wrapped, classic V-belts or wedge belts.

Profiles and dimensions: on request

 © ARNTZ OPTIBELT GROUP, GERMANY

PRODUCT DESCRIPTION
optibelt DK DOUBLE-SIDED V-BELTS

Structure
A cross section of the optibelt DK double-sided V-belt reveals a hexagon made up of two congruent trapeziums. The neutral axis containing the tension cord is exactly half way up the belt profile.
optibelt DK double-sided V-belts consist of:

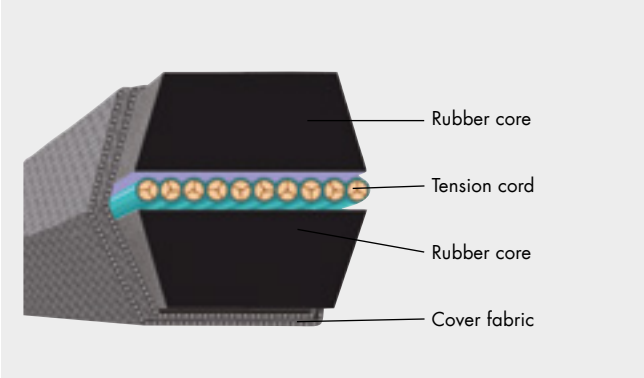

Properties/Application areas
The tension cord positioned at the centre of the belt gives the optibelt DK double-sided V-belts extreme flexibility and low-stretch properties. Thus, the belt is particularly suitable for flexing in different directions in the same plane. optibelt DK double-sided V-belts are used when several pulleys are arranged in one plane and the direction of one or more of the driven pulleys has to be changed without crossing the belts. Due to the position of the tension cord in the neutral axis and the special shape of the double-sided V-belt, the tension cord is not subjected to any force other than tension unlike standard V-belts bent around an outside idler. The optibelt DK double-sided V-belt comes up to typical serpentine arrangements. Special constructions with different top surfaces are possible. Mainly, double-sided V-belts are used in agricultural machinery but also in mechanical engineering.

Standardisation
The cross dimensions of the optibelt DK double-sided V-belts comply with DIN 7722 and ISO 5289.

This applies to the profiles HAA, HBB, HCC and HDD, in accordance with the USA standard ASAE S 211. ..., thereby ensuring an international interchange.
The reference/nominal length of the optibelt DK double-sided V-belt is measured on the effective/outside diameter of the measuring pulley. This length equates to the middle length of the belt.
Conversion factors are as follows:
Profile AA/HAA reference length ≈ centre length – 4 mm
Profile BB/HBB reference length ≈ centre length – 8 mm
Profile CC/HCC reference length ≈ centre length + 3 mm
Profile DD/HDD reference length = centre length!
Experience has shown that in practical use/ordering these conversion factors can be ignored.
Note: Electrically conductive according to ISO 1813.

V-grooved pulleys
No special pulleys are required for optibelt DK double-sided V-belts. Pulleys conforming to ISO 4183, DIN 2211, DIN 2217 and ASAE S 211. ... are suitable.
Profile AA/HAA in grooved pulleys for profile A/13-SPA
Profile BB/HBB in grooved pulleys for profile B/17-SPB
Profile CC/HCC in grooved pulleys for profile C/22-SPC
Profile DD/HDD in grooved pulleys for profile D/32

Special profiles
For special applications, we also supply double-sided V-belts in profiles 22 x 22 and 25 x 22. These are not standardised.

Drive calculation
Drive calculations for optibelt DK double-sided V-belts differ from those given in this manual for two pulley drives. Multi pulley calculations are so complicated that they cannot be presented here.
Reference lengths, rotational speeds, transmission ratios and belt speeds are determined by the reference/outside pulley diameters.
Our Application Engineering Department will be pleased to assist you in the design of drives using optibelt DK double-sided V-belts.

Table 13

Profile	DIN/ISO designation		HAA	HBB	HCC	HDD	–	–
	Designation		AA	BB	CC	DD	22×22	25×22
Belt width	b	≈	13	17	22	32	22	25
Belt height	h	≈	10	13	17	25	22	22
Recommended minimum pulley diameter	$d_{a\ min}$		80	125	224	355	280	280
Belt weight [kg/m]		≈	0.150	0.250	0.440	0.935	0.511	0.625
Belt speed [m/s]	v_{max}	≈	30					

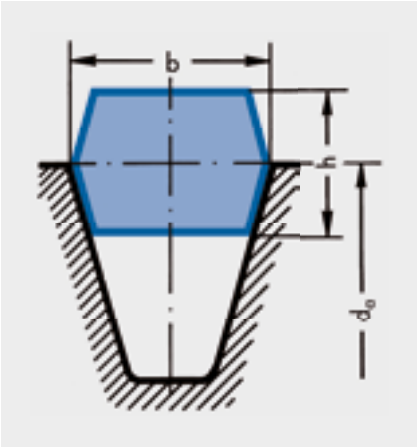

STANDARD PROPERTIES

According to the respective requirements, all Optibelt V-belts are manufactured using carefully selected basic materials and continuously updated technical procedures.
Regular routine checks during production, elaborate laboratory tests and careful testing of the raw materials used guarantees a consistently high level of quality that can be expected from every Optibelt drive element.
Reliability and long service life are considered the most important criteria.

Oil resistance

The limited oil resistance prevents the damaging effects of mineral oils and greases, as long as these substances are not in permanent contact with the timing belt and/or are not present in large quantities. Animal and vegetable fats as well as water-soluble cooling and cutting oils result in a reduction of the service life. For higher concentrations, we recommend the use of our optibelt SUPER X-POWER M=S or the special design "05", respectively.

Heat resistance

Standard V-belts allow ambient temperatures of up to +70° C. Temperatures exceeding this range lead to premature ageing and hardening of V-belts. In such cases, we recommend the use of our special constructions optibelt RED POWER 3 or optibelt SUPER E-POWER or optibelt SUPER X-POWER. For details see page 23.

Dust protection

Dust enormously reduces the service life of V-belts. Wear-resistant fabric covers make Optibelt V-belts resistant to dust. This is demonstrated by their continuous application in cement factories, mills, in the stone processing industries, and in the mining industry.

M=S "Matched Sets"

optibelt SUPER E-POWER M=S, optibelt X-POWER M=S and optibelt SUPER TX M=S are raw edge, cogged V-belts that can be used in sets without measuring. Due to special production processes the narrowest tolerances can be achieved so that V-belts of a given nominal length can be combined without further measurement. The precise edging of the belt results in smooth running. The even power transmission of all belts ensures a high efficiency and saves energy.
Set code numbers are not necessary, there is no set bundling. As a consequence, storage and costs can be reduced.

S=C Plus "SetConstant"

This stands for wrapped V-belts that can be used in a set without measuring.

And here are the advantages:

- saves energy, efficiency of up to 97 %
- consistent power transmission
- incorporates the world famous S=C Plus tolerances: always at nominal length
- extremely low-stretch
- longer service life
- set code numbers are not required
- reduces vibrations with resultant smooth running
- requires only minimal adjustment space
- reduces self-heating, thus ageing resistant
- longer maintenance intervals
- simple storage
- significant cost reductions

Example of S=C Plus length tolerances for a high performance wedge belt with 5000 mm datum length:

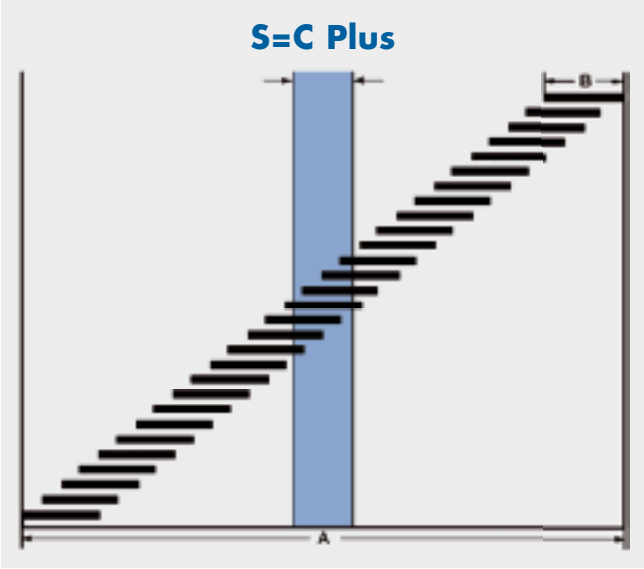

The dimension (A) is the tolerance allowed according to DIN of an individual V-belt with a length of 5000 mm. If you want to install sets for multi-groove drives, the individual elements in a set should not deviate more than 6 mm (B). The tolerance of the optibelt S=C Plus V-belt is considerably lower than those allowed according to the standard.
S=C Plus tolerances are always at nominal length.

 © ARNTZ OPTIBELT GROUP, GERMANY

SPECIAL CONSTRUCTIONS

Extra heat-resistant V-belts

The service life of standard Optibelt V-belts can be massively reduced due to the effects of temperature.
In case of ambient temperatures that constantly vary between +70 °C and +90 °C we recommend optibelt RED POWER 3, optibelt SUPER E-POWER M=S, optibelt SUPER X-POWER M=S or optibelt SUPER TX M=S belts. Special rubber compounds largely prevent premature ageing and brittleness. In borderline cases, trials are recommended, as individual drive parameters such as belt speed and pulley diameter may influence the operational life.
The diagram below illustrates the great impact of ambient temperature on the operational life of belts. It also presents the optimised operational life of special constructions in high temperature ranges compared to standard constructions. However, you cannot expect the same service life as under normal conditions.

Smooth running selected V-belts

Drives that require a smooth running – that is variations of shaft centre distances – such as lathes and grinders, and are supposed to guarantee a vibration free operation, should be equipped with Optibelt V-belts with "selected smooth running". Fluctuations in the shaft centre distance are electronically measured on testing machines. The measurements comply with the Optibelt standards or the conditions agreed upon with our customers.

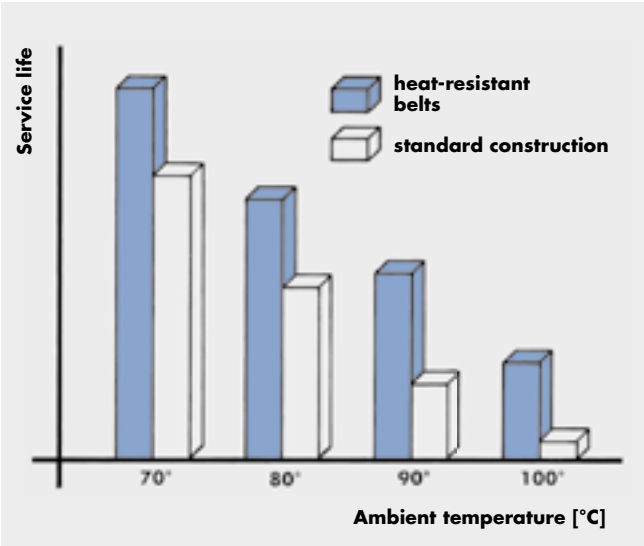

Mining industry

optibelt SK wedge belts and optibelt VB classic V-belts can be used in underground mining as well as in areas above ground that are exposed to explosion and fire risks. For these areas, different national and international testing specifications and standards apply. Optibelt "Mining Belts" comply with all requirement of "DIN 22100-7".

Applications with other special constructions

For special applications e.g. in general mechanical engineering, agricultural machinery and horticulture, further special constructions are also available in intermediate sizes for

- special drives with tension, back bend and guide idlers
- clutching drives
- shock loads
- extreme operating conditions

These Optibelt V-belts in special constructions have different tension cord types and structures with a variety of rubber compounds, different fabric qualities and a differing number of fabric covers and top surfaces.
All special constructions and intermediate lengths must be ordered in sets or in multiples thereof.
As part of this description not all criteria can be dealt with. For further information please contact our Application Engineering Department.

STANDARD RANGE

optibelt RED POWER 3 HIGH PERFORMANCE WEDGE BELTS DIN 7753 PART 1 / ISO 4184

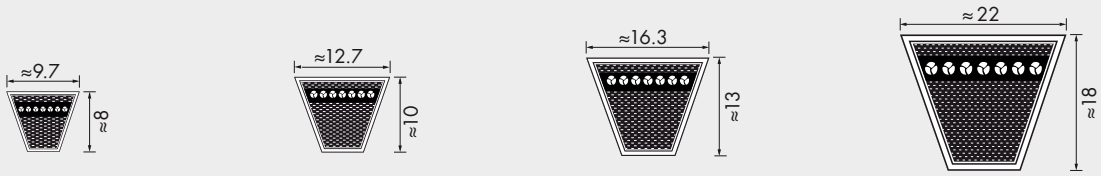

SPZ SPA SPB SPC

Profile SPZ			Profile SPA				Profile SPB	Profile SPC
Datum length ISO [mm] L_d			Datum length ISO [mm] L_d				Datum length ISO [mm] L_d	Datum length ISO [mm] L_d
1202	1587	2137	1207	1700	2282	3082	1250	2000
1212	1600	2187	1232	1707	2300	3150	1320	2120
1237	1612	2240	1250	1732	2307	3182	1400	2240
1250	1637	2287	1257	1757	2332	3282	1500	2360
1262	1662	2360	1282	1782	2360	3350	1600	2500
1287	1687	2500	1307	1800	2382	3382	1700	2650
1312	1700	2650	1320	1807	2432	3550	1800	2800
1320	1737	2800	1332	1832	2482	3750	1900	3000
1337	1762	3000	1357	1857	2500	4000	2000	3150
1362	1787	3150	1382	1882	2532		2120	3350
1387	1800	3350	1400	1900	2582		2240	3550
1400	1837	3550	1407	1907	2607		2360	3750
1412	1862		1432	1932	2632		2500	4000
1437	1887		1457	1957	2650		2650	4250
1462	1900		1482	1982	2682		2800	4500
1487	1937		1500	2000	2732		3000	4750
1500	1987		1507	2032	2782		3150	5000
1512	2000		1532	2057	2800		3350	5300
1537	2037		1557	2082	2832		3550	5600
1562	2120		1582	2120	2847		3750	6000
			1600	2132	2882		4000	6300
			1607	2182	2932		4250	6700
			1632	2207	2982		4500	7100
			1657	2232	3000		4750	7500
			1682	2240	3032		5000	8000
							5300	8500
							5600	9000
							6000	9500
							6300	10000
							6700	
							7100	
							7500	
							8000	
Maximum production length: 4000 mm Non-standard length ranges on request Weight: ≈ 0.074 kg/m			Maximum production length: 4000 mm Non-standard length ranges on request Weight: ≈ 0.123 kg/m				Maximum production length: 12 500 mm Non-standard length ranges on request Weight: ≈ 0.195 kg/m	Maximum production length: 12 500 mm Non-standard length ranges on request Weight: ≈ 0.377 kg/m

Datum length L_d ≙ Pitch length L_w/L_p

Lengths in **bold** type are in S=C Plus (SetConstant).

 © ARNTZ OPTIBELT GROUP, GERMANY

STANDARD RANGE

optibelt RED POWER 3 HIGH PERFORMANCE WEDGE BELTS ARPM/MPTA

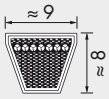

3V/9N

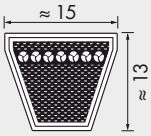

5V/15N

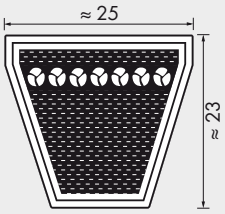

8V/25N

Profile 3V/9N		Profile 5V/15N		Profile 8V/25N	
Belt designation		Belt designation		Belt designation	
Profile, length code	Profile, outside length, L_a [mm]	Profile, length code	Profile, outside length, L_a [mm]	Profile, length code	Profile, outside length, L_a [mm]
3V 475	9N 1206	5V 530	15N 1346	8V 1000	25N 2540
3V 500	9N 1270	5V 560	15N 1422	8V 1120	25N 2845
3V 530	9N 1346	5V 600	15N 1524	8V 1180	25N 2997
3V 560	9N 1422	5V 630	15N 1600	8V 1250	25N 3175
3V 600	9N 1524	5V 670	15N 1702	8V 1320	25N 3353
3V 630	9N 1600	5V 710	15N 1803	8V 1400	25N 3556
3V 670	9N 1702	5V 750	15N 1905	8V 1500	25N 3810
3V 710	9N 1803	5V 800	15N 2032	8V 1600	25N 4064
3V 750	9N 1905	5V 850	15N 2159	8V 1700	25N 4318
3V 800	9N 2032	5V 900	15N 2286	8V 1800	25N 4572
3V 850	9N 2159	5V 950	15N 2413	8V 1900	25N 4826
3V 900	9N 2286	5V 1000	15N 2540	8V 2000	25N 5080
3V 950	9N 2413	5V 1060	15N 2692	8V 2120	25N 5385
3V 1000	9N 2540	5V 1120	15N 2845	8V 2240	25N 5690
3V 1060	9N 2692	5V 1180	15N 2997	8V 2360	25N 5994
3V 1120	9N 2845	5V 1250	15N 3175	8V 2500	25N 6350
3V 1180	9N 2997	5V 1320	15N 3353	8V 2650	25N 6731
3V 1250	9N 3175	5V 1400	15N 3556	8V 2800	25N 7112
3V 1320	9N 3353	5V 1500	15N 3810	8V 3000	25N 7620
3V 1400	9N 3556	5V 1600	15N 4064	8V 3150	25N 8001
		5V 1700	15N 4318	8V 3350	25N 8509
		5V 1800	15N 4572	8V 3550	25N 9017
		5V 1900	15N 4826	8V 3750	25N 9525
		5V 2000	15N 5080	8V 4000	25N 10160
		5V 2120	15N 5385	8V 4250	25N 10795
		5V 2240	15N 5690	8V 4500	25N 11430
		5V 2360	15N 5994	8V 4750	25N 12065
		5V 2500	15N 6350		
		5V 2650	15N 6731		
		5V 2800	15N 7112		
		5V 3000	15N 7620		
		5V 3150	15N 8001		

Maximum production length: 4000 mm L_a

Non-standard length ranges on request

Weight: ≈ 0.074 kg/m

Maximum production length: 12 500 mm L_a

Non-standard length ranges on request

Weight: ≈ 0.195 kg/m

Maximum production length: 12 500 mm L_a

Non-standard length ranges on request

Weight: ≈ 0.575 kg/m

Lengths in **bold** type are in S=C Plus (SetConstant).

STANDARD RANGE

optibelt BLUE POWER HIGH PERFORMANCE WEDGE BELTS

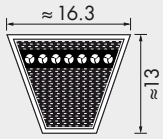

SPB

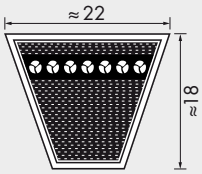

SPC

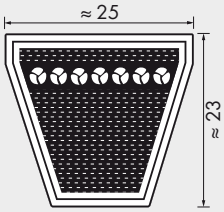

8V/25N

DIN 7753 Part 1 / ISO 4184 / BS 3790 ARPM/MPTA

Profile SPB		Profile SPC		Profile 8V/25N	
Datum length ISO L_d [mm]		Datum length ISO L_d [mm]		Belt designation	
				Profile, length code	Profile, outside length, L_a [mm]
1500	4750	2000	6300	8V 1600	25N 4064
1600	5000	2120	6700	8V 1700	25N 4318
1700	5300	2240	7100	8V 1800	25N 4572
1800	5600	2360	7500	8V 1900	25N 4826
1900	6000	2500	8000	8V 2000	25N 5080
2000	6300	2650	8500	8V 2120	25N 5385
2120	6700	2800	9000	8V 2240	25N 5690
2240	7100	3000		8V 2360	25N 5994
2360	7500	3150		8V 2500	25N 6350
2500	8000	3350		8V 2650	25N 6731
2650		3550		8V 2800	25N 7112
2800		3750		8V 3000	25N 7620
3000		4000		8V 3150	25N 8001
3150		4250		8V 3350	25N 8509
3350		4500		8V 3550	25N 9017
3550		4750			
3750		5000			
4000		5300			
4250		5600			
4500		6000			
Maximum production length: 18 000 mm Minimum order quantity: 1500 mm – 1800 mm = 25 pieces Over 1800 mm = 23 pieces Weight: ≈ 0.206 kg/m		Maximum production length: 18 000 mm Minimum order quantity: from 2000 mm = 16 pieces Weight: ≈ 0.389 kg/m		Maximum production length: 18 000 mm L_a Minimum order quantity: from 4064 mm L_a = 14 pieces Weight: ≈ 0.603 kg/m	

 © ARNTZ OPTIBELT GROUP, GERMANY

STANDARD RANGE

optibelt SK HIGH PERFORMANCE WEDGE BELTS
DIN 7753 PART 1 / ISO 4184

SPZ

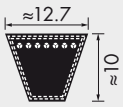

SPA

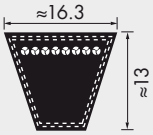

SPB

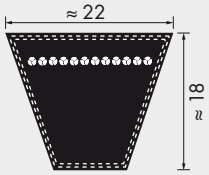

SPC

Profile SPZ			Profile SPA				Profile SPB		Profile SPC
Datum length ISO L_d [mm]			Datum length ISO L_d [mm]				Datum length ISO L_d [mm]		Datum length ISO L_d [mm]
487	1047	**1662**	732	**1382**	**2120**	**3350**	**1250**	**3650**	**2000**
512	1060	**1687**	757	**1400**	**2132**	**3382**	**1320**	**3750**	**2120**
562	1077	**1700**	782	**1407**	**2182**	**3550**	**1400**	**3800•**	**2240**
587	1087	**1737**	800	**1432**	**2207**	**3750**	**1450**	**4000**	**2360**
612	1112	**1762**	807	**1457**	**2232**	**4000**	**1500**	**4050•**	**2500**
630	1120	**1787**	832	**1482**	**2240**	**4250**	**1600**	**4250**	**2650**
637	1137	**1800**	850	**1500**	**2282**	**4500**	**1700**	**4300•**	**2800**
662	**1162**	**1812**	857	**1507**	**2300**		**1750**	**4500**	**3000**
670	**1180**	**1837**	882	**1532**	**2307**		**1800**	**4560•**	**3150**
687	**1187**	**1850**	900	**1557**	**2332**		**1850**	**4750**	**3350**
710	**1202**	**1862**	907	**1582**	**2360**		**1900**	**4820•**	**3550**
722	**1212**	**1887**	932	**1600**	**2382**		**2000**	**5000**	**3750**
737	**1237**	**1900**	950	**1607**	**2432**		**2020•**	**5070•**	**4000**
750	**1250**	**1937**	957	**1632**	**2482**		**2060**	**5300**	**4250**
762	**1262**	**1987**	982	**1657**	**2500**		**2120**	**5600**	**4500**
772	**1287**	**2000**	1000	**1682**	**2532**		**2150•**	**6000**	**4750**
787	**1312**	**2037**	1007	**1700**	**2582**		**2180**	**6300**	**5000**
800	**1320**	**2120**	1032	**1707**	**2607**		**2240**	**6700**	**5300**
812	**1337**	**2137**	1060	**1732**	**2632**		**2280•**	**7100**	**5600**
825	**1347**	**2150•**	1082	**1757**	**2650**		**2360**	**7500**	**6000**
837	**1362**	**2187**	1107	**1782**	**2682**		**2391**	**8000**	**6300**
850	**1387**	**2240**	1120	**1800**	**2732**		**2400•**		**6700**
862	**1400**	**2287**	1132	**1807**	**2782**		**2500**		**7100**
875	**1412**	**2360**	1157	**1832**	**2800**		**2650**		**7500**
887	**1437**	**2500**	**1180**	**1857**	**2832**		**2680•**		**8000**
900	**1462**	**2540•**	**1207**	**1882**	**2847**		**2800**		**8500**
912	**1487**	**2650**	**1232**	**1900**	**2882**		**2840•**		**9000**
925	**1500**	**2690•**	**1250**	**1907**	**2932**		**2850**		**9500**
937	**1512**	**2800**	**1257**	**1932**	**2982**		**2900**		**10000**
950	**1537**	**2840•**	**1272**	**1957**	**3000**		**3000**		10600
962	**1562**	**3000**	**1282**	**1982**	**3032**		**3150**		11200
987	**1587**	**3150**	**1307**	**2000**	**3082**		**3250**		12500
1000	**1600**	**3350**	**1320**	**2032**	**3150**		**3350**		
1012	**1612**	**3550**	**1332**	**2057**	**3182**		**3450**		
1024	**1637**		**1357**	**2082**	**3282**		**3550**		
1037	**1650**								
Maximum production length: 4500 mm L_d Minimum order quantity: Over 1800 mm = 20 pieces for non-standard length ranges 60 pieces for special constructions Weight: ≈ 0.074 kg/m			Maximum production length: 4500 mm L_d Minimum order quantity: Over 1800 mm = 31 pieces for non-standard length ranges 93 pieces for special constructions Weight: ≈ 0.123 kg/m				Maximum production length: 18000 mm L_d Minimum order quantity: Over 1800 mm = 25 pieces for non-standard length ranges 75 pieces for special constructions Weight: ≈ 0.195 kg/m		Maximum production length: 21000 mm L_d Minimum order quantity: Over 2000 mm = 16 pieces for non-standard length ranges 48 pieces for special constructions Weight: ≈ 0.377 kg/m

Datum length L_d ≙ Pitch length L_w/L_p • Non stock items

Lengths in **bold** type are in S=C Plus (SetConstant).

STANDARD RANGE

optibelt SK HIGH PERFORMANCE WEDGE BELTS ARPM/MPTA

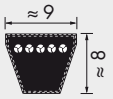

3V/9N

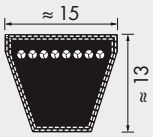

5V/15N

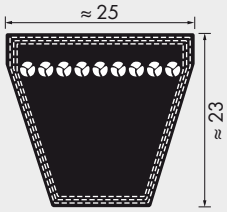

8V/25N

Profile 3V/9N		Profile 5V/15N		Profile 8V/25N	
Belt designation		Belt designation		Belt designation	
Profile, length code	Profile, outside length, L_a [mm]	Profile, length code	Profile, outside length, L_a [mm]	Profile, length code	Profile, outside length, L_a [mm]
3V 250	9N 635	**5V 530**	**15N 1346**	**8V 1000**	**25N 2540**
3V 265	9N 673	**5V 560**	**15N 1422**	**8V 1120**	**25N 2845**
3V 280	9N 711	**5V 600**	**15N 1524**	**8V 1180**	**25N 2997**
3V 300	9N 762	**5V 630**	**15N 1600**	**8V 1250**	**25N 3175**
3V 315	9N 800	**5V 670**	**15N 1702**	**8V 1320**	**25N 3353**
3V 335	9N 851	**5V 710**	**15N 1803**	**8V 1400**	**25N 3556**
3V 355	9N 902	**5V 750**	**15N 1905**	**8V 1500**	**25N 3810**
3V 375	9N 952	**5V 800**	**15N 2032**	**8V 1600**	**25N 4064**
3V 400	9N 1016	**5V 850**	**15N 2159**	**8V 1700**	**25N 4318**
3V 425	9N 1079	**5V 900**	**15N 2286**	**8V 1800**	**25N 4572**
3V 450	9N 1143	**5V 950**	**15N 2413**	**8V 1900**	**25N 4826**
3V 475	**9N 1206**	**5V 1000**	**15N 2540**	**8V 2000**	**25N 5080**
3V 500	**9N 1270**	**5V 1060**	**15N 2692**	**8V 2120**	**25N 5385**
3V 530	**9N 1346**	**5V 1120**	**15N 2845**	**8V 2240**	**25N 5690**
3V 560	**9N 1422**	**5V 1180**	**15N 2997**	**8V 2360**	**25N 5994**
3V 600	**9N 1524**	**5V 1250**	**15N 3175**	**8V 2500**	**25N 6350**
3V 630	**9N 1600**	**5V 1320**	**15N 3353**	**8V 2650**	**25N 6731**
3V 670	**9N 1702**	**5V 1400**	**15N 3556**	**8V 2800**	**25N 7112**
3V 710	**9N 1803**	**5V 1500**	**15N 3810**	**8V 3000**	**25N 7620**
3V 750	**9N 1905**	**5V 1600**	**15N 4064**	**8V 3150**	**25N 8001**
3V 800	**9N 2032**	**5V 1700**	**15N 4318**	**8V 3350**	**25N 8509**
3V 850	**9N 2159**	**5V 1800**	**15N 4572**	**8V 3550**	**25N 9017**
3V 900	**9N 2286**	**5V 1900**	**15N 4826**	**8V 3750**	**25N 9525**
3V 950	**9N 2413**	**5V 2000**	**15N 5080**	8V 4000	25N 10160
3V 1000	**9N 2540**	**5V 2120**	**15N 5385**	8V 4250	25N 10795
3V 1060	**9N 2692**	**5V 2240**	**15N 5690**	8V 4500	25N 11430
3V 1120	**9N 2845**	**5V 2360**	**15N 5994**	8V 4750	25N 12065
3V 1180	**9N 2997**	**5V 2500**	**15N 6350**	8V 5000	25N 12700
3V 1250	**9N 3175**	**5V 2650**	**15N 6731**		
3V 1320	**9N 3353**	**5V 2800**	**15N 7112**		
3V 1400	**9N 3556**	**5V 3000**	**15N 7620**		
		5V 3150	**15N 8001**		
		5V 3350	**15N 8509**		
		5V 3550	**15N 9017**		

Maximum production length: 4500 mm L_a
Minimum order quantity:
Over 1800 mm L_a =
20 pieces for non-standard length ranges
60 pieces for special constructions

Weight: ≈ 0.074 kg/m

Maximum production length: 18 000 mm L_a
Minimum order quantity:
Over 1800 mm L_a =
25 pieces for non-standard length ranges
75 pieces for special constructions

Weight: ≈ 0.195 kg/m

Maximum standard production length:
21 000 mm L_a
Over 18 000 to 21 000 mm on request
Minimum order quantity:
Over 2540 mm L_a =
11 pieces for non-standard length ranges
33 pieces for special constructions
Weight: ≈ 0.575 kg/m

Lengths in **bold** type are in S=C Plus (SetConstant).

 © ARNTZ OPTIBELT GROUP, GERMANY

STANDARD RANGE
optibelt VB CLASSIC V-BELTS
DIN 2215 / ISO 4184

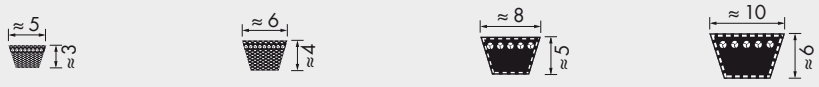

5 | Y/6 | 8 | Z/10

Profile 5*		Profile Y/6*		Profile 8		Profile Z/10								
Datum length ISO L_d [mm]	Inside length L_i [mm]	Datum length ISO L_d [mm]	Inside length L_i [mm]	Datum length ISO L_d [mm]	Inside length L_i [mm]	Belt no.	Datum length ISO L_d [mm]	Inside length L_i [mm]	Belt no.	Datum length ISO L_d [mm]	Inside length L_i [mm]	Belt no.	Datum length ISO L_d [mm]	Inside length L_i [mm]
200	190	295	280	335*	315*	Z 11	312*	290*	Z 38½	997	975	**Z 68**	**1747**	**1725**
239	229	315	300	375*	355*	Z 12½	337*	315*	Z 39	1022	1000	**Z 69**	**1772**	**1750**
270	260	350	335	420*	400*	Z 14	397*	375*	Z 40	1038	1016	**Z 70**	**1797**	**1775**
290	280	415	400	445*	425*	Z 15	422*	400*	Z 40½	1052	1030	**Z 71**	**1822**	**1800**
310	300	440	425	470*	450*	Z 16	447*	425*	Z 41	1063	1041	**Z 73**	**1872**	**1850**
325	315	465	450	495*	475*	Z 17	472*	450*	Z 41½	1072	1050	**Z 75**	**1922**	**1900**
332	322	515	500	510*	490*	Z 18	497*	475*	Z 42	1082	1060	**Z 78**	**1997**	**1975**
345	335	555	540	550*	530*	Z 19	502*	480*	Z 43	1102	1080	**Z 79**	**2022**	**2000**
385	375	615	600	580*	560*	Z 19¾	522*	500*	Z 43¼	1122	1100	**Z 83½**	**2142**	**2120**
435	425	865	850	595*	575*	Z 20	537*	515*	Z 44	1142	1120	**Z 88**	**2262**	**2240**
485	475			620*	600*	Z 20½	547*	525*	Z 45	1172	1150	**Z 93**	**2382**	**2360**
510	500			650*	630*	Z 21	552*	530*	Z 46	1187	1165	**Z 98**	**2522**	**2500**
540	530			690*	670*	Z 21¼	562*	540*	Z 46½	1202	1180			
564	554			720*	700*	Z 22	582*	560*	Z 47	1216	1194			
610	600			730*	710*	Z 23	597	575	Z 48	1237	1215			
				770*	750*	Z 24	622	600	Z 48½	1247	1225			
				795*	775*	Z 25	652	630	Z 49	1272	1250			
				820*	800*	Z 26	672	650	Z 50	1292	1270			
				845	825	Z 27	692	670	Z 51	1317	1295			
				870	850	Z 27½	722	700	Z 52	1342	1320			
				895	875	Z 28	732	710	Z 53	1368	1346			
				920	900	Z 28½	747	725	Z 54	1393	1371			
				970	950	Z 29	752	730	Z 55	1422	1400			
				1020	1000	Z 29½	772	750	Z 56	1444	1422			
				1040	1020	Z 30	787	765	Z 57	1472	1450			
				1070	1050	Z 31	797	775	Z 58	1497	1475			
				1095	1075	Z 31½	822	800	Z 59	1522	1500			
				1140	1120	Z 32	842	820	Z 60	1546	1524			
				1220	1200	Z 33	847	825	**Z 61**	**1572**	**1550**			
				1270	1250	Z 33½	872	850	**Z 62**	**1597**	**1575**			
						Z 34	887	865	**Z 63**	**1622**	**1600**			
						Z 35	897	875	**Z 64**	**1648**	**1626**			
						Z 36	922	900	**Z 65**	**1673**	**1651**			
						Z 37	947	925	**Z 66**	**1697**	**1675**			
						Z 38	972	950	**Z 67**	**1722**	**1700**			
Further sizes on request Weight: ≈ 0.018 kg/m		Further sizes on request Weight: ≈ 0.026 kg/m		Weight: ≈ 0.042 kg/m		Maximum production length: 4500 mm Minimum order quantity: Over 1800 mm = 20 pieces for non-standard length ranges 60 pieces for special constructions Weight: ≈ 0.064 kg/m								

Datum length L_d ≙ Pitch length L_w/L_p * Raw edge, cogged V-belts Further sizes on request

Lengths in **bold** type are in S=C Plus (SetConstant).

STANDARD RANGE
optibelt VB CLASSIC V-BELTS
DIN 2215 / ISO 4184

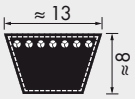

A/13

Profile A/13

Belt no.	Datum length ISO L_d [mm]	Inside length L_i [mm]	Belt no.	Datum length ISO L_d [mm]	Inside length L_i [mm]	Belt no.	Datum length ISO L_d [mm]	Inside length L_i [mm]	Belt no.	Datum length ISO L_d [mm]	Inside length L_i [mm]
A 16	437	407	A 41	1071	1041	**A 69**	**1780**	**1750**	**A 105**	**2697**	**2667**
A 18	487	457	A 41½	1080	1050	**A 70**	**1805**	**1775**	**A 107**	**2755**	**2725**
A 19	510	480	A 42	1090	1060	**A 71**	**1830**	**1800**	**A 108**	**2773**	**2743**
A 20	538	508	A 42½	1105	1075	**A 72**	**1855**	**1825**	**A 110**	**2830**	**2800**
A 21	565	535	A 43	1130	1100	**A 73**	**1884**	**1854**	**A 112**	**2875**	**2845**
A 22	590	560	A 43½	1135	1105	**A 74**	**1910**	**1880**	**A 114**	**2926**	**2896**
A 23	605	575	A 44	1150	1120	**A 75**	**1930**	**1900**	**A 116**	**2976**	**2946**
A 23½	630	600	A 45	1173	1143	**A 76**	**1960**	**1930**	**A 118**	**3030**	**3000**
A 24	640	610	A 45½	1180	1150	**A 77**	**1986**	**1956**	**A 120**	**3078**	**3048**
A 25	660	630	**A 46**	**1198**	**1168**	**A 78**	**2010**	**1980**	**A 124**	**3180**	**3150**
A 26	680	650	**A 46½**	**1210**	**1180**	**A 79**	**2030**	**2000**	**A 128**	**3280**	**3250**
A 26½	700	670	**A 47**	**1230**	**1200**	**A 80**	**2062**	**2032**	**A 132**	**3380**	**3350**
A 27	716	686	**A 47½**	**1245**	**1215**	**A 81**	**2090**	**2060**	**A 136**	**3484**	**3454**
A 27½	730	700	**A 48**	**1250**	**1220**	**A 82**	**2113**	**2083**	**A 140**	**3580**	**3550**
A 28	740	710	**A 48½**	**1255**	**1225**	**A 83**	**2130**	**2100**	**A 144**	**3688**	**3658**
A 29	760	730	**A 49**	**1280**	**1250**	**A 83½**	**2150**	**2120**	**A 148**	**3780**	**3750**
A 29½	780	750	**A 50**	**1300**	**1270**	**A 84**	**2164**	**2134**	**A 158**	**4030**	**4000**
A 30	797	767	**A 51**	**1330**	**1300**	**A 84½**	**2180**	**2150**	**A 167**	**4280**	**4250**
A 31	805	775	**A 52**	**1350**	**1320**	**A 85**	**2190**	**2160**	**A 187**	**4780**	**4750**
A 31½	830	800	**A 53**	**1380**	**1350**	**A 86½**	**2230**	**2200**	**A 197**	**5030**	**5000**
A 32	843	813	**A 54**	**1405**	**1375**	**A 87**	**2240**	**2210**			
A 32½	855	825	**A 55**	**1430**	**1400**	**A 88**	**2270**	**2240**			
A 33	871	841	**A 56**	**1452**	**1422**	**A 89**	**2291**	**2261**			
A 34	880	850	**A 57**	**1480**	**1450**	**A 90**	**2316**	**2286**			
A 34½	905	875	**A 58**	**1505**	**1475**	**A 91**	**2341**	**2311**			
A 35	919	889	**A 59**	**1530**	**1500**	**A 92**	**2367**	**2337**			
A 35½	930	900	**A 60**	**1555**	**1525**	**A 93**	**2390**	**2360**			
A 36	944	914	**A 61**	**1580**	**1550**	**A 94**	**2418**	**2388**			
A 37	955	925	**A 62**	**1605**	**1575**	**A 95**	**2443**	**2413**			
A 37½	980	950	**A 63**	**1630**	**1600**	**A 96**	**2468**	**2438**			
A 38	995	965	**A 64**	**1655**	**1625**	**A 97**	**2494**	**2464**			
A 38½	1005	975	**A 65**	**1680**	**1650**	**A 98**	**2530**	**2500**			
A 39	1030	1000	**A 66**	**1706**	**1676**	**A 100**	**2570**	**2540**			
A 40	1046	1016	**A 67**	**1730**	**1700**	**A 102**	**2621**	**2591**			
A 40½	1060	1030	**A 68**	**1755**	**1725**	**A 104**	**2680**	**2650**			

Maximum production length: 10 000 mm L_i
Minimum order quantity:
Over 1800 mm =
31 pieces for non-standard length ranges
93 pieces for special constructions
Weight: ≈ 0.109 kg/m

Datum length L_d ≙ Pitch length L_w/L_p Further sizes on request

Lengths in **bold** type are in S=C Plus (SetConstant).

 © ARNTZ OPTIBELT GROUP, GERMANY

STANDARD RANGE
optibelt VB CLASSIC V-BELTS
DIN 2215 / ISO 4184

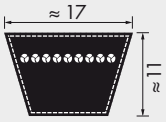

B/17

Profile B/17

Belt no.	Datum length ISO L_d [mm]	Inside length L_i [mm]	Belt no.	Datum length ISO L_d [mm]	Inside length L_i [mm]	Belt no.	Datum length ISO L_d [mm]	Inside length L_i [mm]	Belt no.	Datum length ISO L_d [mm]	Inside length L_i [mm]
B 23	610	570	**B 51**	**1340**	**1300**	**B 87**	**2250**	**2210**	**B 140**	**3590**	**3550**
B 24	655	615	**B 52**	**1360**	**1320**	**B 88**	**2280**	**2240**	**B 142**	**3640**	**3600**
B 25	670	630	**B 52½**	**1375**	**1335**	**B 89**	**2301**	**2261**	**B 144**	**3698**	**3658**
B 26	690	650	**B 53**	**1390**	**1350**	**B 90**	**2326**	**2286**	**B 146**	**3740**	**3700**
B 26½	710	670	**B 53½**	**1400**	**1360**	**B 91**	**2340**	**2300**	**B 148**	**3790**	**3750**
B 27	726	686	**B 54**	**1412**	**1372**	**B 92**	**2377**	**2337**	**B 150**	**3850**	**3810**
B 28	750	710	**B 55**	**1440**	**1400**	**B 93**	**2400**	**2360**	**B 151**	**3890**	**3850**
B 29	765	725	**B 56**	**1462**	**1422**	**B 94**	**2428**	**2388**	**B 152**	**3901**	**3861**
B 30	790	750	**B 57**	**1490**	**1450**	**B 94½**	**2440**	**2400**	**B 154**	**3952**	**3912**
B 31	815	775	**B 58**	**1513**	**1473**	**B 95**	**2453**	**2413**	**B 155**	**3990**	**3950**
B 32	840	800	**B 59**	**1540**	**1500**	**B 96**	**2478**	**2438**	**B 156**	**4002**	**3962**
B 32½	865	825	**B 60**	**1565**	**1525**	**B 96½**	**2490**	**2450**	**B 158**	**4040**	**4000**
B 33	876	836	**B 61**	**1590**	**1550**	**B 97**	**2505**	**2465**	**B 160**	**4104**	**4064**
B 34	890	850	**B 62**	**1615**	**1575**	**B 98**	**2540**	**2500**	**B 162**	**4155**	**4115**
B 34½	915	875	**B 63**	**1640**	**1600**	**B 99**	**2555**	**2515**	**B 165**	**4240**	**4200**
B 35	929	889	**B 64**	**1665**	**1625**	**B 100**	**2580**	**2540**	**B 167**	**4290**	**4250**
B 36	940	900	**B 65**	**1690**	**1650**	**B 101**	**2605**	**2565**	**B 173**	**4434**	**4394**
B 37	965	925	**B 66**	**1716**	**1676**	**B 102**	**2640**	**2600**	**B 175**	**4490**	**4450**
B 37½	990	950	**B 67**	**1740**	**1700**	**B 103**	**2656**	**2616**	**B 177**	**4540**	**4500**
B 38	1005	965	**B 68**	**1765**	**1725**	**B 104**	**2690**	**2650**	**B 180**	**4612**	**4572**
B 38½	1015	975	**B 69**	**1790**	**1750**	**B 105**	**2707**	**2667**	**B 187**	**4790**	**4750**
B 39	1040	1000	**B 69½**	**1801**	**1761**	**B 106**	**2740**	**2700**	**B 195**	**4993**	**4953**
B 40	1056	1016	**B 70**	**1815**	**1775**	**B 107**	**2758**	**2718**	**B 197**	**5040**	**5000**
B 40½	1070	1030	**B 71**	**1840**	**1800**	**B 108**	**2790**	**2750**	**B 208**	**5340**	**5300**
B 41	1080	1040	**B 72**	**1869**	**1829**	**B 110**	**2840**	**2800**	**B 210**	**5374**	**5334**
B 41½	1090	1050	**B 73**	**1890**	**1850**	**B 112**	**2885**	**2845**	**B 220**	**5640**	**5600**
B 42	1100	1060	**B 74**	**1920**	**1880**	**B 114**	**2940**	**2900**	**B 236**	**6040**	**6000**
B 42½	1115	1075	**B 75**	**1940**	**1900**	**B 115**	**2961**	**2921**	**B 240**	**6136**	**6096**
B 43	1130	1090	**B 76**	**1970**	**1930**	**B 116**	**2990**	**2950**	**B 248**	**6340**	**6300**
B 43¼	1140	1100	**B 77**	**1990**	**1950**	**B 118**	**3040**	**3000**	**B 264**	**6740**	**6700**
B 44	1160	1120	**B 78**	**2021**	**1981**	**B 120**	**3088**	**3048**	**B 276**	**7040**	**7000**
B 45	1190	1150	**B 79**	**2040**	**2000**	**B 122**	**3139**	**3099**	**B 280**	**7140**	**7100**
B 45½	1203	1163	**B 80**	**2072**	**2032**	**B 124**	**3190**	**3150**			
B 46	**1215**	**1175**	**B 81**	**2100**	**2060**	**B 126**	**3240**	**3200**			
B 46½	**1220**	**1180**	**B 82**	**2123**	**2083**	**B 128**	**3290**	**3250**			
B 47	**1240**	**1200**	**B 83**	**2140**	**2100**	**B 130**	**3342**	**3302**			
B 48	**1255**	**1215**	**B 83½**	**2160**	**2120**	**B 132**	**3390**	**3350**			
B 48½	**1265**	**1225**	**B 84**	**2174**	**2134**	**B 134**	**3444**	**3404**			
B 49	**1290**	**1250**	**B 85**	**2200**	**2160**	**B 136**	**3490**	**3450**			
B 50	**1315**	**1275**	**B 86**	**2240**	**2200**	**B 138**	**3545**	**3505**			

Maximum production length: 21 000 mm L_i
Minimum order quantity:
Over 1800 mm =
21 pieces for non-standard length ranges
63 pieces for special constructions
Weight: ≈ 0.196 kg/m

Datum length L_d ≙ Pitch length L_w/L_p Further sizes on request

Lengths in **bold** type are in S=C Plus (SetConstant).

STANDARD RANGE
optibelt VB CLASSIC V-BELTS
DIN 2215 / ISO 4184

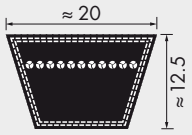

20

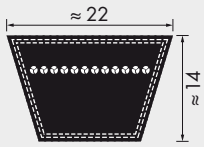

C/22

Profile 20		Profile C/22								
Datum length ISO L_d [mm]	Inside length L_i [mm]	Belt no.	Datum length ISO L_d [mm]	Inside length L_i [mm]	Belt no.	Datum length ISO L_d [mm]	Inside length L_i [mm]	Belt no.	Datum length ISO L_d [mm]	Inside length L_i [mm]
950	900	C 43	1148	1090	C 84	2192	2134	C 134	3462	3404
1050	1000	C 47	1258	1200	C 85	2217	2159	C 136	3508	3450
1170	1120	C 48	1273	1215	C 86	2242	2184	C 138	3563	3505
1230	1180	C 49	1308	1250	C 87	2268	2210	C 140	3608	3550
1300	1250	C 51	1353	1295	C 88	2298	2240	C 142	3665	3607
1370	1320	C 52	1378	1320	C 89	2319	2261	C 144	3716	3658
1450	1400	C 53	1408	1350	C 90	2344	2286	C 146	3758	3700
1550	1500	C 54	1433	1375	C 92	2395	2337	C 148	3808	3750
1650	1600	C 55	1458	1400	C 93	2418	2360	C 150	3868	3810
1750	1700	C 56	1483	1425	C 94	2446	2388	C 158	4058	4000
1850	1800	C 57	1508	1450	C 95	2471	2413	C 162	4158	4100
1950	1900	C 58	1533	1475	C 96	2496	2438	C 166	4274	4216
2050	2000	C 59	1558	1500	C 96½	2508	2450	C 167	4308	4250
2170	2120	C 60	1582	1524	C 97	2522	2464	C 168	4325	4267
2290	2240	C 61	1608	1550	C 98	2558	2500	C 170	4376	4318
2410	2360	C 62	1632	1574	C 99	2583	2525	C 173	4452	4394
2550	2500	C 63	1658	1600	C 100	2598	2540	C 175	4503	4445
2700	2650	C 65	1708	1650	C 101	2618	2560	C 177	4558	4500
2850	2800	C 66	1734	1676	C 102	2649	2591	C 180	4630	4572
3050	3000	C 67	1758	1700	C 104	2700	2642	C 187	4808	4750
3200	3150	C 68	1785	1727	C 105	2725	2667	C 190	4884	4826
3400	3350	C 69	1808	1750	C 106	2750	2692	C 195	5011	4953
3600	3550	C 70	1836	1778	C 108	2808	2750	C 197	5058	5000
3800	3750	C 71	1858	1800	C 110	2858	2800	C 208	5358	5300
4050	4000	C 72	1887	1829	C 112	2903	2845	C 210	5392	5334
4550	4500	C 73	1912	1854	C 114	2954	2896	C 220	5658	5600
5050	5000	C 74	1938	1880	C 115	2979	2921	C 225	5773	5715
6050	6000	C 75	1958	1900	C 116	3008	2950	C 236	6058	6000
		C 76	1988	1930	C 117	3023	2965	C 240	6154	6096
		C 77	2014	1956	C 118	3058	3000	C 248	6358	6300
		C 78	2039	1981	C 120	3106	3048	C 264	6758	6700
		C 79	2058	2000	C 122	3157	3099	C 270	6916	6858
		C 80	2090	2032	C 124	3208	3150	C 280	7158	7100
		C 81	2118	2060	C 126	3258	3200	C 295	7558	7500
		C 82	2141	2083	C 128	3308	3250	C 300	7678	7620
		C 83	2166	2108	C 130	3360	3302	C 315	8058	8000
		C 83½	2178	2120	C 132	3408	3350			

Maximum production length: 10 000 mm L_i
Minimum order quantity:
Over 1800 mm =
18 pieces for non-standard length ranges
54 pieces for special constructions
Weight: ≈ 0.266 kg/m

Maximum standard production length: 21 000 mm L_i
Over 18 000 to 21 000 mm on request
Minimum order quantity:
Over 1800 mm =
16 pieces for non-standard length ranges
48 pieces for special constructions
Weight: ≈ 0.324 kg/m

Datum length L_d ≙ Pitch length L_w/L_p Further sizes on request

Lengths in **bold** type are in S=C Plus (SetConstant).

 © ARNTZ OPTIBELT GROUP, GERMANY

STANDARD RANGE
optibelt VB CLASSIC V-BELTS
DIN 2215 / ISO 4184

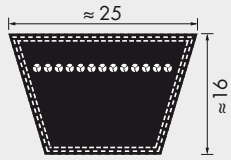

25

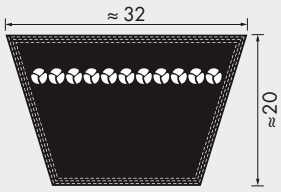

D/32

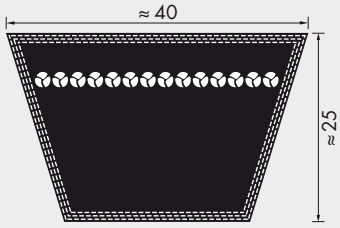

E/40

Profile 25		Profile D/32			Profile E/40		
Datum length ISO L_d [mm]	Inside length L_i [mm]	Belt no.	Datum length ISO L_d [mm]	Inside length L_i [mm]	Belt no.	Datum length ISO L_d [mm]	Inside length L_i [mm]
1460	**1400**	**D 79**	**2075**	**2000**	**E 118**	**3080**	**3000**
1560	**1500**	**D 98**	**2575**	**2500**	**E 158**	**4080**	**4000**
1660	**1600**	**D 104**	**2725**	**2650**	**E 197**	**5080**	**5000**
1760	**1700**	**D 110**	**2875**	**2800**	**E 220**	**5680**	**5600**
1860	**1800**	**D 118**	**3075**	**3000**	**E 236**	**6080**	**6000**
1960	**1900**	**D 120**	**3123**	**3048**	**E 248**	**6380**	**6300**
2060	**2000**	**D 124**	**3225**	**3150**	**E 280**	**7180**	**7100**
2180	**2120**	**D 128**	**3326**	**3251**	**E 295**	**7580**	**7500**
2300	**2240**	**D 132**	**3425**	**3350**	**E 315**	**8080**	**8000**
2420	**2360**	**D 135**	**3500**	**3425**	**E 354**	**9080**	**9000**
2560	**2500**	**D 136**	**3529**	**3454**	**E 394**	**10080**	**10000**
2710	**2650**	**D 140**	**3625**	**3550**	E 441	11280	11200
2760	**2700**	**D 144**	**3733**	**3658**	E 492	12580	12500
2860	**2800**	**D 148**	**3825**	**3750**			
3060	**3000**	**D 154**	**4000**	**3925**			
3210	**3150**	**D 158**	**4075**	**4000**			
3410	**3350**	**D 162**	**4190**	**4115**			
3610	**3550**	**D 167**	**4325**	**4250**			
3810	**3750**	**D 173**	**4469**	**4394**			
4060	**4000**	**D 177**	**4575**	**4500**			
4310	**4250**	**D 180**	**4647**	**4572**			
4560	**4500**	**D 187**	**4825**	**4750**			
4810	**4750**	**D 195**	**5028**	**4953**			
5060	**5000**	**D 197**	**5075**	**5000**			
5360	**5300**	**D 208**	**5375**	**5300**			
5660	**5600**	**D 210**	**5409**	**5334**			
6060	**6000**	**D 220**	**5675**	**5600**			
6360	**6300**	**D 225**	**5790**	**5715**			
6760	**6700**	**D 236**	**6075**	**6000**			
7160	**7100**	**D 240**	**6171**	**6096**			
7560	**7500**	**D 248**	**6375**	**6300**			
8060	**8000**	**D 264**	**6775**	**6700**			
8560	**8500**	**D 270**	**6933**	**6858**			
9060	**9000**	**D 280**	**7175**	**7100**			
		D 295	**7575**	**7500**			
		D 300	**7695**	**7620**			
		D 315	**8075**	**8000**			
		D 330	**8457**	**8382**			
		D 335	**8575**	**8500**			
		D 354	**9075**	**9000**			
		D 374	**9575**	**9500**			
		D 394	**10075**	**10000**			
		D 441	11275	11200			

Maximum standard production length:
21 000 mm L_i
Over 18 000 to 21 000 mm on request
Minimum order quantity:
Over 1800 mm =
14 pieces for non-standard length ranges
42 pieces for certain special constructions
Weight: ≈ 0.420 kg/m

Maximum standard production length: 21 000 mm L_i
Over 18 000 to 21 000 mm on request
Minimum order quantity:
Over 2000 mm =
11 pieces for non-standard length ranges
33 pieces for certain special constructions
Weight: ≈ 0.668 kg/m

Maximum production length: 21 000 mm L_i
Minimum order quantity:
Over 3000 mm =
7 pieces for non-standard length ranges
21 pieces for certain special constructions

Weight: ≈ 0.958 kg/m

Datum length L_d ≙ Pitch length L_w/L_p

Further sizes on request

Lengths in **bold** type are in S=C Plus (SetConstant).

STANDARD RANGE

optibelt RED POWER 3 KRAFTBANDS
WITH HIGH PERFORMANCE WEDGE BELTS DIN/ISO

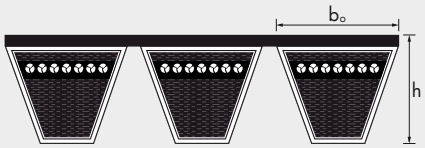

Profile	SPB	SPC
b_o ≈ [mm]	16.5	22.0
h ≈ [mm]	15.6	22.6

Profile SPB	Profile SPC
Datum length ISO L_d [mm]	Datum length ISO L_d [mm]
2000	3000
2120	3150
2240	3350
2360	3550
2500	3750
2650	4000
2800	4250
3000	4500
3150	4750
3350	5000
3550	5300
3750	5600
4000	6000
4250	6300
4500	6700
4750	7100
5000	7500
5300	8000
5600	8500
6000	9000
6300	9500
6700	10000
7100	
7500	
8000	

Maximum production length: 10 000 mm L_d

Non-standard length ranges on request

Weight:
per rib ≈ 0.261 kg/m

Maximum production length: 10 000 mm L_d

Non-standard length ranges on request

Weight:
per rib ≈ 0.555 kg/m

Datum length L_d ≙ Pitch length L_w/L_p Further sizes on request

 © ARNTZ OPTIBELT GROUP, GERMANY

STANDARD RANGE

optibelt RED POWER 3 KRAFTBANDS
WITH HIGH PERFORMANCE WEDGE BELTS ARPM/MPTA

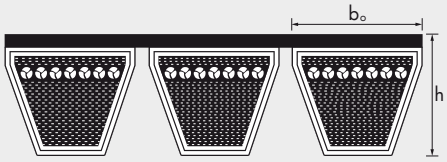

Profile	3V/9J	5V/15J	8V/25J
$b_o \approx$ [mm]	9.0	15.0	25.0
h $\approx$ [mm]	9.9	15.1	25.5

Profile 3V/9J		Profile 5V/15J		Profile 8V/25J	
Belt designation		Belt designation		Belt designation	
Profile, length code	Profile, outside length, L_a [mm]	Profile, length code	Profile, outside length, L_a [mm]	Profile, length code	Profile, outside length, L_a [mm]
3V 500	9J 1270	**5V 560**	15J 1422	**8V 1000**	25J 2540
3V 530	9J 1346	**5V 600**	15J 1524	**8V 1060**	25J 2692
3V 560	9J 1422	**5V 630**	15J 1600	**8V 1120**	25J 2845
3V 600	9J 1524	**5V 670**	15J 1702	**8V 1180**	25J 2997
3V 630	9J 1600	**5V 710**	15J 1803	**8V 1250**	25J 3175
3V 670	9J 1702	**5V 750**	15J 1905	**8V 1320**	25J 3353
3V 710	9J 1803	**5V 800**	15J 2032	**8V 1400**	25J 3556
3V 750	9J 1905	**5V 850**	15J 2159	**8V 1500**	25J 3810
3V 800	9J 2032	**5V 900**	15J 2286	**8V 1600**	25J 4064
3V 850	9J 2159	**5V 950**	15J 2413	**8V 1700**	25J 4318
3V 900	9J 2286	**5V 1000**	15J 2540	**8V 1800**	25J 4572
3V 950	9J 2413	**5V 1060**	15J 2692	**8V 1900**	25J 4826
3V 1000	9J 2540	**5V 1120**	15J 2845	**8V 2000**	25J 5080
3V 1060	9J 2692	**5V 1180**	15J 2997	**8V 2120**	25J 5385
3V 1120	9J 2845	**5V 1250**	15J 3175	**8V 2240**	25J 5690
3V 1180	9J 2997	**5V 1320**	15J 3353	**8V 2360**	25J 5994
3V 1250	9J 3175	**5V 1400**	15J 3556	**8V 2500**	25J 6350
3V 1320	9J 3353	**5V 1500**	15J 3810	**8V 2650**	25J 6731
3V 1400	9J 3556	**5V 1600**	15J 4064	**8V 2800**	25J 7112
		5V 1700	15J 4318	**8V 3000**	25J 7620
		5V 1800	15J 4572	**8V 3150**	25J 8001
		5V 1900	15J 4826	**8V 3350**	25J 8509
		5V 2000	15J 5080	**8V 3550**	25J 9017
		5V 2120	15J 5385	**8V 3750**	25J 9525
		5V 2240	15J 5690	**8V 4000**	25J 10160
		5V 2360	15J 5994	**8V 4250**	25J 10795
		5V 2500	15J 6350	**8V 4500**	25J 11430
		5V 2650	15J 6731	**8V 4750**	25J 12065
		5V 2800	15J 7112		
		5V 3000	15J 7620		
		5V 3150	15J 8001		

Profile 3V/9J	Profile 5V/15J	Profile 8V/25J
Maximum production length: 4000 mm L_a	Maximum production length: 10 000 mm L_a	Maximum production length: 18 000 mm L_a
Non-standard length ranges on request	Non-standard length ranges on request	Non-standard length ranges on request
Weight: per rib ≈ 0.122 kg/m	Weight: per rib ≈ 0.252 kg/m	Weight: per rib ≈ 0.693 kg/m

Further sizes on request

STANDARD RANGE

optibelt BLUE POWER KRAFTBANDS WITH HIGH PERFORMANCE WEDGE BELTS DIN 7753 PART 1 / ISO 4184

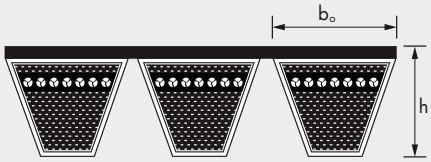

Profile	SPB	SPC
b_o ≈ [mm]	16.5	22.0
h ≈ [mm]	15.6	22.6

Profile SPB	Profile SPC
Datum length ISO L_d [mm]	Datum length ISO L_d [mm]
2000	3000
2120	3150
2240	3350
2360	3550
2500	3750
2650	4000
2800	4250
3000	4500
3150	4750
3350	5000
3550	5300
3750	5600
4000	6000
4250	6300
4500	6700
4750	7100
5000	7500
5300	8000
5600	8500
6000	9000
6300	9500
6700	10000
7100	
7500	
8000	

Maximum production length: 10 000 mm L_d
Non-standard length ranges from 2000 mm L_d
Minimum order quantity:
from 2000 mm L_d
4 pieces with 5 ribs or
5 pieces with 4 ribs or
7 pieces with 3 ribs or
11 pieces with 2 ribs
or a multiple thereof
Weight: per rib ≈ 0.283 kg/m

Maximum production length: 10 000 mm L_d
Non-standard length ranges from 3000 mm L_d
Minimum order quantity:
3 pieces with 5 ribs or
4 pieces with 4 ribs or
5 pieces with 3 ribs or
8 pieces with 2 ribs
or a multiple thereof

Weight: per rib ≈ 0.567 kg/m

Datum length L_d ≙ Pitch length L_w/L_p Further sizes on request

 © ARNTZ OPTIBELT GROUP, GERMANY

STANDARD RANGE

optibelt BLUE POWER KRAFTBANDS WITH HIGH PERFORMANCE WEDGE BELTS ARPM/MPTA

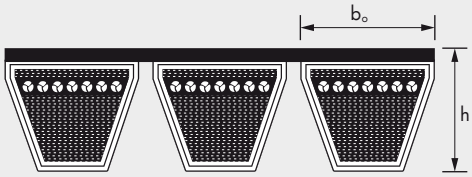

Profile	5V/15J	8V/25J
b_o ≈ [mm]	15.0	25.0
h ≈ [mm]	15.1	25.5

Profile 5V/15J		Profile 8V/25J	
Belt designation		Belt designation	
Profile, length code	Profile, outside length, L_d [mm]	Profile, length code	Profile, outside length, L_d [mm]
5V 800	15J 2032	8V 1000	25J 2540
5V 850	15J 2159	8V 1060	25J 2692
5V 900	15J 2286	8V 1120	25J 2845
5V 950	15J 2413	8V 1180	25J 2997
5V 1000	15J 2540	8V 1250	25J 3175
5V 1060	15J 2692	8V 1320	25J 3353
5V 1120	15J 2845	8V 1400	25J 3556
5V 1180	15J 2997	8V 1500	25J 3810
5V 1250	15J 3175	8V 1600	25J 4064
5V 1320	15J 3353	8V 1700	25J 4318
5V 1400	15J 3556	8V 1800	25J 4572
5V 1500	15J 3810	8V 1900	25J 4826
5V 1600	15J 4064	8V 2000	25J 5080
5V 1700	15J 4318	8V 2120	25J 5385
5V 1800	15J 4572	8V 2240	25J 5690
5V 1900	15J 4826	8V 2360	25J 5994
5V 2000	15J 5080	8V 2500	25J 6350
5V 2120	15J 5385	8V 2650	25J 6731
5V 2240	15J 5690	8V 2800	25J 7112
5V 2360	15J 5994	8V 3000	25J 7620
5V 2500	15J 6350	8V 3150	25J 8001
5V 2650	15J 6731	8V 3350	25J 8509
5V 2800	15J 7112	8V 3550	25J 9017
5V 3000	15J 7620	8V 3750	25J 9525
5V 3150	15J 8001	8V 4000	25J 10160
		8V 4250	25J 10795
		8V 4500	25J 11430
		8V 4750	25J 12065

Maximum production length: 18 000 mm L_d
Non-standard length ranges from 2032 mm L_d
Minimum order quantity:
6 pieces with 5 ribs or
7 pieces with 4 ribs or
10 pieces with 3 ribs or
15 pieces with 2 ribs
or a multiple thereof

Weight: per rib ≈ 0.253 kg/m

Maximum production length: 18 000 mm L_d
Non-standard length ranges from 2540 mm L_d
Minimum order quantity:
3 pieces with 5 ribs or
3 pieces with 4 ribs or
5 pieces with 3 ribs or
7 pieces with 2 ribs
or a multiple thereof

Weight: per rib ≈ 0.738 kg/m

Further sizes on request

STANDARD RANGE

optibelt KB KRAFTBANDS WITH WEDGE BELTS DIN/ISO

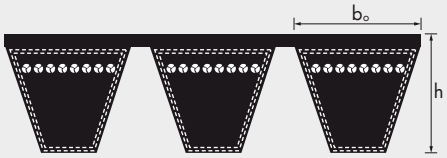

Profile	SPZ	SPA	SPB	SPC
$b_o \approx$ [mm]	9.7	12.7	16.5	22.0
h $\approx$ [mm]	10.5	12.5	15.6	22.6

Profile SPZ	Profile SPA	Profile SPB	Profile SPC
Datum length ISO L_d [mm]	Datum length ISO L_d [mm]	Datum length ISO L_d [mm]	Datum length ISO L_d [mm]
1250	1250	2000	3000
1400	1400	2120	3150
1500	1500	2240	3350
1600	1600	2360	3550
1700	1700	2500	3750
1800	1800	2650	4000
1900	1900	2800	4250
2000	2000	3000	4500
2120	2120	3150	4750
2240	2240	3350	5000
2360	2360	3550	5300
2500	2500	3750	5600
2650	2650	4000	6000
2800	2800	4250	6300
3000	3000	4500	6700
3150	3150	4750	7100
3350	3350	5000	7500
3550	3550	5300	8000
	3750	5600	8500
	4000	6000	9000
	4250	6300	9500
	4500	6700	10000
		7100	10600
		7500	11200
		8000	11800
			12500
Maximum production length: 4500 mm L_d Non-standard length ranges from 1800 mm L_d Minimum order quantity for special length ranges: 8 pieces with 5 ribs or 10 pieces with 4 ribs or 14 pieces with 3 ribs or 21 pieces with 2 ribs or a multiple thereof Weight: per rib ≈ 0.120 kg/m Minimum order quantity for design with aramid tension cord on request	Maximum production length: 4500 mm L_d Non-standard length ranges from 1800 mm L_d Minimum order quantity for all length ranges: 6 pieces with 5 ribs or 8 pieces with 4 ribs or 11 pieces with 3 ribs or 16 pieces with 2 ribs or a multiple thereof Weight: per rib ≈ 0.166 kg/m Minimum order quantity for design with aramid tension cord on request	Maximum production length: 10000 mm L_d Non-standard length ranges from 2000 mm L_d Minimum order quantity for special length ranges: 4 pieces with 5 ribs or 5 pieces with 4 ribs or 7 pieces with 3 ribs or 11 pieces with 2 ribs or a multiple thereof Weight: per rib ≈ 0.261 kg/m Minimum order quantity for design with aramid tension cord on request	Maximum production length: 12500 mm L_d Non-standard length ranges from 3000 mm L_d Minimum order quantity for all length ranges: 3 pieces with 5 ribs or 4 pieces with 4 ribs or 5 pieces with 3 ribs or 8 pieces with 2 ribs or a multiple thereof Weight: per rib ≈ 0.555 kg/m Minimum order quantity for design with aramid tension cord on request

Datum length L_d ≙ Pitch length L_w/L_p Further sizes on request

 © ARNTZ OPTIBELT GROUP, GERMANY

STANDARD RANGE

optibelt KB KRAFTBANDS WITH WEDGE BELTS ARPM/MPTA

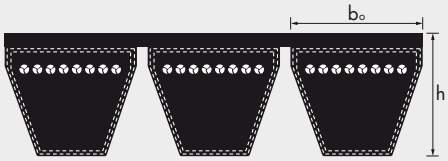

Profile	3V/9J	5V/15J	8V/25J
$b_o \approx$ [mm]	9.0	15.0	25.0
h $\approx$ [mm]	9.9	15.1	25.5

Profile 3V/9J		Profile 5V/15J		Profile 8V/25J	
Belt designation		Belt designation		Belt designation	
Profile, length code	Profile, outside length, L_a [mm]	Profile, length code	Profile, outside length, L_a [mm]	Profile, length code	Profile, outside length, L_a [mm]
3V 500	9J 1270	**5V 560**	15J 1422	**8V 1000**	25J 2540
3V 530	9J 1346	**5V 600**	15J 1524	**8V 1060**	25J 2692
3V 560	9J 1422	**5V 630**	15J 1600	**8V 1120**	25J 2845
3V 600	9J 1524	**5V 670**	15J 1702	**8V 1180**	25J 2997
3V 630	9J 1600	**5V 710**	15J 1803	**8V 1250**	25J 3175
3V 670	9J 1702	**5V 750**	15J 1905	**8V 1320**	25J 3353
3V 710	9J 1803	**5V 800**	15J 2032	**8V 1400**	25J 3556
3V 750	9J 1905	**5V 850**	15J 2159	**8V 1500**	25J 3810
3V 800	9J 2032	**5V 900**	15J 2286	**8V 1600**	25J 4064
3V 850	9J 2159	**5V 950**	15J 2413	**8V 1700**	25J 4318
3V 900	9J 2286	**5V 1000**	15J 2540	**8V 1800**	25J 4572
3V 950	9J 2413	**5V 1060**	15J 2692	**8V 1900**	25J 4826
3V 1000	9J 2540	**5V 1120**	15J 2845	**8V 2000**	25J 5080
3V 1060	9J 2692	**5V 1180**	15J 2997	**8V 2120**	25J 5385
3V 1120	9J 2845	**5V 1250**	15J 3175	**8V 2240**	25J 5690
3V 1180	9J 2997	**5V 1320**	15J 3353	**8V 2360**	25J 5994
3V 1250	9J 3175	**5V 1400**	15J 3556	**8V 2500**	25J 6350
3V 1320	9J 3353	**5V 1500**	15J 3810	**8V 2650**	25J 6731
3V 1400	9J 3556	**5V 1600**	15J 4064	**8V 2800**	25J 7112
		5V 1700	15J 4318	**8V 3000**	25J 7620
		5V 1800	15J 4572	**8V 3150**	25J 8001
		5V 1900	15J 4826	**8V 3350**	25J 8509
		5V 2000	15J 5080	**8V 3550**	25J 9017
		5V 2120	15J 5385	**8V 3750**	25J 9525
		5V 2240	15J 5690	**8V 4000**	25J 10160
		5V 2360	15J 5994	**8V 4250**	25J 10795
		5V 2500	15J 6350	**8V 4500**	25J 11430
		5V 2650	15J 6731	**8V 4750**	25J 12065
		5V 2800	15J 7112		
		5V 3000	15J 7620		
		5V 3150	15J 8001		
		5V 3350	15J 8509		
		5V 3550	15J 9017		

Maximum production length: 4250 mm L_a
Non-standard length ranges from 1800 mm L_a
Minimum order quantity
for special length ranges:
9 pieces with 5 ribs or
12 pieces with 4 ribs or
16 pieces with 3 ribs or
24 pieces with 2 ribs
or a multiple thereof
Weight: per rib ≈ 0.102 kg/m
Minimum order quantity for design with aramid tension cord on request

Maximum production length: 10 000 mm L_a
Non-standard length ranges from 1800 mm L_a
Minimum order quantity
for special length ranges:
6 pieces with 5 ribs or
7 pieces with 4 ribs or
10 pieces with 3 ribs or
15 pieces with 2 ribs
or a multiple thereof
Weight: per rib ≈ 0.252 kg/m
Minimum order quantity for design with aramid tension cord on request

Maximum standard production length: 15 000 mm L_a
Over 15 000 to 18 000 mm on request
Non-standard length ranges from 2540 mm L_a
Minimum order quantity
for all sizes:
2 pieces with 5 ribs or
2 pieces with 4 ribs or
3 pieces with 3 ribs
or a multiple thereof
Weight: per rib ≈ 0.693 kg/m
Minimum order quantity for design with aramid tension cord on request

Further sizes on request

STANDARD RANGE

optibelt SUPER KBX-POWER KRAFTBANDS – RAW EDGE, COGGED ARPM/MPTA

Profile	3VX/9JX	5VX/15JX
b_o ≈ [mm]	9.0	15.0
h ≈ [mm]	9.9	15.1

Profile 3VX/9JX		Profile 5VX/15JX	
Belt designation		Belt designation	
Profile, length code	Profile, outside length, L_d [mm]	Profile, length code	Profile, outside length, L_d [mm]
3VX 500	9JX 1270	**5VX 500**	15JX 1270
3VX 530	9JX 1346	**5VX 530**	15JX 1346
3VX 560	9JX 1422	**5VX 560**	15JX 1422
3VX 600	9JX 1524	**5VX 600**	15JX 1524
3VX 630	9JX 1600	**5VX 630**	15JX 1600
3VX 670	9JX 1702	**5VX 670**	15JX 1702
3VX 710	9JX 1803	**5VX 710**	15JX 1803
3VX 750	9JX 1905	**5VX 750**	15JX 1905
3VX 800	9JX 2032	**5VX 800**	15JX 2032
3VX 850	9JX 2159	**5VX 850**	15JX 2159
3VX 900	9JX 2286	**5VX 900**	15JX 2286
3VX 950	9JX 2413	**5VX 950**	15JX 2413
3VX 1000	9JX 2540	**5VX 1000**	15JX 2540
3VX 1060	9JX 2692	**5VX 1060**	15JX 2692
3VX 1120	9JX 2845	**5VX 1120**	15JX 2845
3VX 1180	9JX 2997	**5VX 1180**	15JX 2997
3VX 1250	9JX 3175	**5VX 1250**	15JX 3175
3VX 1320	9JX 3353	**5VX 1320**	15JX 3353
3VX 1400	9JX 3556	**5VX 1400**	15JX 3556

Kraftbands in profiles XPZ, XPA, XPB, AX/HAX and BX/HBX available on request.

Weight: per rib ≈ 0.117 kg/m

Weight: per rib ≈ 0.241 kg/m

Further sizes on request

 © ARNTZ OPTIBELT GROUP, GERMANY

STANDARD RANGE

optibelt KB KRAFTBANDS WITH CLASSIC V-BELTS DIN/ISO, ASAE

Profile	A/HA	B/HB	C/HC	D/HD	E*
$b_o \approx$ [mm]	13.0	17.0	22.0	32.0	40.0
h $\approx$ [mm]	9.9	13.0	16.2	22.4	25.0

* Available on request

Profile A/HA

(Profile A) Inside length Belt no.	L_i [mm]	(Profile HA) Outside length L_a [mm]
47	1200	1236
51	1300	1336
56	1422	1458
57	1450	1486
59	1500	1536
64	1625	1661
67	1700	1736
71	1800	1836
75	1900	1936
79	2000	2036
88	2240	2276
98	2500	2536
100	2540	2576
104	2650	2686
112	2845	2881
120	3048	3084
128	3250	3286
144	3658	3694
158	4000	4036
167	4250	4286
187	4750	4786

Maximum production length:
10 000 mm L_i
Non-standard length ranges from 1800 mm
Minimum order quantity for special length ranges from:
1200 to 2000 mm
6 pieces with 5 ribs or
8 pieces with 4 ribs or
10 pieces with 3 ribs or
16 pieces with 2 ribs
or a multiple thereof
2001 to 8000 mm
6 pieces with 5 ribs or
8 pieces with 4 ribs or
11 pieces with 3 ribs or
16 pieces with 2 ribs
or a multiple thereof
Weight: per rib ≈ 0.163 kg/m
Minimum order quantity for design with aramid tension cord on request

Profile B/HB

(Profile B) Inside length Belt no.	L_i [mm]	(Profile HB) Outside length L_a [mm]	(Profile B) Inside length Belt no.	L_i [mm]	(Profile HB) Outside length L_a [mm]
47	1200	1262	146	3700	3762
51	1300	1362	148	3750	3812
55	1400	1462	158	4000	4062
59	1500	1562	167	4250	4312
61	1550	1612	177	4500	4562
63	1600	1662	187	4750	4812
64	1625	1687	197	5000	5062
67	1700	1762	208	5300	5362
71	1800	1862	220	5600	5662
73	1850	1912			
75	1900	1962			
79	2000	2062			
83	2100	2162			
88	2240	2302			
91	2300	2362			
94 1/2	2400	2462			
98	2500	2562			
102	2600	2662			
106	2700	2762			
112	2845	2907			
118	3000	3062			
120	3048	3110			
128	3250	3312			
132	3350	3412			
140	3550	3612			

Maximum production length:
18 000 mm L_i
Non-standard length ranges from 1800 mm
Minimum order quantity for special length ranges from:
5 pieces with 5 ribs or
6 pieces with 4 ribs or
9 pieces with 3 ribs or
13 pieces with 2 ribs
or a multiple thereof
Weight: per rib ≈ 0.266 kg/m
Minimum order quantity for design with aramid tension cord on request

Profile C/HC

(Profile C) Inside length Belt no.	L_i [mm]	(Profile HC) Outside length L_a [mm]
90	2286	2361
98	2500	2575
108	2750	2825
120	3048	3123
128	3250	3325
140	3550	3625
146	3700	3775
151	3850	3925
167	4250	4325
177	4500	4575
187	4750	4825
197	5000	5075
208	5300	5375
220	5600	5675
236	6000	6075
248	6300	6375

Maximum production length:
18 000 mm L_i
Non-standard length ranges from 2286 mm
Minimum order quantity for special length ranges from:
2286 to 10 000 mm
4 pieces with 5 ribs or
5 pieces with 4 ribs or
6 pieces with 3 ribs or
10 pieces with 2 ribs
or a multiple thereof
10 001 to 12 000 mm
3 pieces with 5 ribs or
4 pieces with 4 ribs or
5 pieces with 3 ribs or
8 pieces with 2 ribs
or a multiple thereof
Weight: per rib ≈ 0.447 kg/m
Minimum order quantity for design with aramid tension cord on request

Profile D/HD

(Profile D) Inside length Belt no.	L_i [mm]	(Profile HD) Outside length L_a [mm]
98	2500	2611
110	2800	2911
120	3048	3159
128	3250	3361
144	3658	3769
158	4000	4111
162	4115	4226
173	4394	4505
180	4572	4683
195	4953	5064
210	5334	5445
225	5715	5826
240	6096	6207
255	6477	6588
270	6858	6969
285	7239	7350
300	7620	7731
315	8000	8111
330	8382	8493
345	8763	8874
360	9144	9255
390	9906	10017
420	10668	10779
450	11430	11541
480	12200	12311
540	13716	13827
600	15240	15351
660	16764	16875
700	17780	17891

Maximum production length:
18 000 mm L_i
Non-standard length ranges from 2500 mm
Minimum order quantity for all sizes:
2 pieces with 5 ribs or
2 pieces with 4 ribs or
3 pieces with 3 ribs or
5 pieces with 2 ribs
or a multiple thereof
Weight: per rib ≈ 0.798 kg/m
Minimum order quantity for design with aramid tension cord on request

Further sizes on request

STANDARD RANGE

optibelt SUPER X-POWER M=S WEDGE BELTS – RAW EDGE, COGGED

DIN 7753 PART 1 / ISO 4184 AND ARPM/MPTA

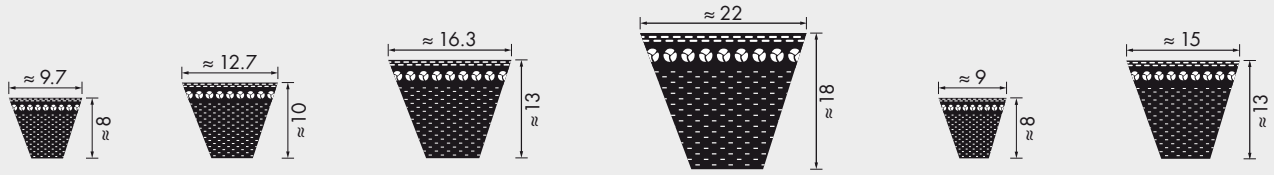

XPZ XPA XPB XPC 3VX/9NX 5VX/15NX

Profile XPZ	Profile XPA	Profile XPB	Profile XPC	Profile 3VX/9NX		Profile 5VX/15NX	
Datum length ISO L_d [mm]	Datum length ISO L_d [mm]	Datum length ISO L_d [mm]	Datum length ISO L_d [mm]	Belt designation		Belt designation	
				Profile, length code	Profile, outside length, L_a [mm]	Profile, length code	Profile, outside length, L_a [mm]
587	707	1250	2000	**3VX 250**	9NX 635	**5VX 500**	15NX 1270
612	732	1320	2120	**3VX 265**	9NX 673	**5VX 530**	15NX 1346
630	757	1400	2240	**3VX 280**	9NX 711	**5VX 560**	15NX 1422
637	782	1500	2360	**3VX 300**	9NX 762	**5VX 600**	15NX 1524
662	800	1600	2500	**3VX 315**	9NX 800	**5VX 630**	15NX 1600
670	807	1700	2650	**3VX 335**	9NX 851	**5VX 670**	15NX 1702
687	832	1750	2800	**3VX 355**	9NX 902	**5VX 710**	15NX 1803
710	850	1800	3000	**3VX 375**	9NX 952	**5VX 750**	15NX 1905
730	857	1850	3150	**3VX 400**	9NX 1016	**5VX 800**	15NX 2032
737	882	1900	3350	**3VX 425**	9NX 1079	**5VX 850**	15NX 2159
750	900	2000	3550	**3VX 450**	9NX 1143	**5VX 900**	15NX 2286
762	907	2020		**3VX 475**	9NX 1206	**5VX 950**	15NX 2413
772	932	2120		**3VX 500**	9NX 1270	**5VX 1000**	15NX 2540
787	950	2150		**3VX 530**	9NX 1346	**5VX 1060**	15NX 2692
800	957	2240		**3VX 560**	9NX 1422	**5VX 1120**	15NX 2845
812	982	2280		**3VX 600**	9NX 1524	**5VX 1180**	15NX 2997
825	1000	2360		**3VX 630**	9NX 1600	**5VX 1250**	15NX 3175
837	1007	2400		**3VX 670**	9NX 1702	**5VX 1320**	15NX 3353
850	1030	2500		**3VX 710**	9NX 1803	**5VX 1400**	15NX 3556
862	1060	2650		**3VX 750**	9NX 1905		
875	1082	2680		**3VX 800**	9NX 2032		
887	1107	2800		**3VX 850**	9NX 2159		
900	1120	2840		**3VX 900**	9NX 2286		
912	1132	3000		**3VX 950**	9NX 2413		
925	1157	3150		**3VX 1000**	9NX 2540		
937	1180	3350		**3VX 1060**	9NX 2692		
950	1207	3550		**3VX 1120**	9NX 2845		
962	1232			**3VX 1180**	9NX 2997		
987	1250			**3VX 1250**	9NX 3175		
1000	1257			**3VX 1320**	9NX 3353		
1012	1272			**3VX 1400**	9NX 3556		
1037	1282						
1060	1307						
1077	1320						
1087	1332						
	1357						
	1382						
	1400						
1112	1432						
1120	1450						
1137	1457						
1162	1482						
1180	1500						
1187	1507						
1202	1532						
1212	1557						
1237	1582						
1250	1600						
1262	1607						
1287	1632						
1312	1650						
1320	1682						
1337	1700						
1362	1732						
1387	1750						
1400	1757						
1412	1782						
1437	1800						
1462	1832						
1487	1850						
1500	1882						
1512	1900						
1537	1932						
1562	1950						
1587	1982						
1600	2000						
1612	2120						
1662	2240						
1700	2360						
1750	2500						
1762	2650						
1800	2800						
1850	3000						
1900	3150						
1950	3350						
2000	3550						
2120							
2150							
2240							
2360							
2500							
2540							
2650							
2690							
2800							
2840							
3000							
3150							
3350							
3550							
Weight: ≈ 0.065 kg/m	Weight: ≈ 0.096 kg/m	Weight: ≈ 0.183 kg/m	Weight: ≈ 0.340 kg/m	Weight: ≈ 0.065 kg/m		Weight: ≈ 0.183 kg/m	

Datum length L_d ≙ Pitch length L_w/L_p Further sizes on request

 © ARNTZ OPTIBELT GROUP, GERMANY

optibelt SUPER E-POWER available on request

STANDARD RANGE

optibelt SUPER E-POWER M=S WEDGE BELTS – RAW EDGE, COGGED

DIN 7753 PART 1 / ISO 4184 AND ARPM/MPTA

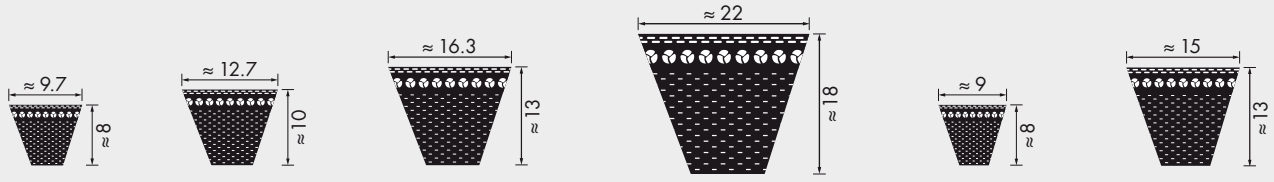

XPZ XPA XPB XPC 3VX/9NX 5VX/15NX

Profile XPZ	Profile XPA	Profile XPB	Profile XPC	Profile 3VX/9NX		Profile 5VX/15NX	
Datum length ISO L_d [mm]	Datum length ISO L_d [mm]	Datum length ISO L_d [mm]	Datum length ISO L_d [mm]	Belt designation		Belt designation	
				Profile, length code	Profile, outside length, L_a [mm]	Profile, length code	Profile, outside length, L_a [mm]
587	707	1250	2000	**3VX 250**	9NX 635	**5VX 500**	15NX 1270
612	732	1320	2120	**3VX 265**	9NX 673	**5VX 530**	15NX 1346
630	757	1400	2240	**3VX 280**	9NX 711	**5VX 560**	15NX 1422
637	782	1500	2360	**3VX 300**	9NX 762	**5VX 600**	15NX 1524
662	800	1600	2500	**3VX 315**	9NX 800	**5VX 630**	15NX 1600
670	807	1700	2650	**3VX 335**	9NX 851	**5VX 670**	15NX 1702
687	832	1750	2800	**3VX 355**	9NX 902	**5VX 710**	15NX 1803
710	850	1800	3000	**3VX 375**	9NX 952	**5VX 750**	15NX 1905
730	857	1850	3150	**3VX 400**	9NX 1016	**5VX 800**	15NX 2032
737	882	1900	3350	**3VX 425**	9NX 1079	**5VX 850**	15NX 2159
750	900	2000	3550	**3VX 450**	9NX 1143	**5VX 900**	15NX 2286
762	907	2020		**3VX 475**	9NX 1206	**5VX 950**	15NX 2413
772	932	2120		**3VX 500**	9NX 1270	**5VX 1000**	15NX 2540
787	950	2150		**3VX 530**	9NX 1346	**5VX 1060**	15NX 2692
800	957	2240		**3VX 560**	9NX 1422	**5VX 1120**	15NX 2845
812	982	2280		**3VX 600**	9NX 1524	**5VX 1180**	15NX 2997
825	1000	2360		**3VX 630**	9NX 1600	**5VX 1250**	15NX 3175
837	1007	2400		**3VX 670**	9NX 1702	**5VX 1320**	15NX 3353
850	1030	2500		**3VX 710**	9NX 1803	**5VX 1400**	15NX 3556
862	1060	2650		**3VX 750**	9NX 1905		
875	1082	2680		**3VX 800**	9NX 2032		
887	1107	2800		**3VX 850**	9NX 2159		
900	1120	2840		**3VX 900**	9NX 2286		
912	1132	3000		**3VX 950**	9NX 2413		
925	1157	3150		**3VX 1000**	9NX 2540		
937	1180	3350		**3VX 1060**	9NX 2692		
950	1207	3550		**3VX 1120**	9NX 2845		
962	1232			**3VX 1180**	9NX 2997		
987	1250			**3VX 1250**	9NX 3175		
1000	1257			**3VX 1320**	9NX 3353		
1012	1272			**3VX 1400**	9NX 3556		
1037	1282						
1060	1307						
1077	1320						
1087	1332						
	1357						
	1382						
	1400						
587 1112 1900	707 1432	1250	2000	3VX 250 – 3VX 425	9NX 635 – 9NX 1079	5VX 500 – 5VX 850	15NX 1270 – 15NX 2159
612 1120 1950	732 1450	1320	2120	3VX 265 – 3VX 475	9NX 673 – 9NX 1206	5VX 530 – 5VX 950	15NX 1346 – 15NX 2413
630 1137 2000	757 1457	1400	2240	3VX 280 – 3VX 500	9NX 711 – 9NX 1270	5VX 560 – 5VX 1000	15NX 1422 – 15NX 2540
637 1162 2120	782 1482	1500	2360	3VX 300 – 3VX 530	9NX 762 – 9NX 1346	5VX 600 – 5VX 1060	15NX 1524 – 15NX 2692
662 1180 2150	800 1500	1600	2500	3VX 315 – 3VX 560	9NX 800 – 9NX 1422	5VX 630 – 5VX 1120	15NX 1600 – 15NX 2845
670 1187 2240	807 1507	1700	2650	3VX 335 – 3VX 600	9NX 851 – 9NX 1524	5VX 670 – 5VX 1180	15NX 1702 – 15NX 2997
687 1202 2360	832 1532	1750	2800	3VX 355 – 3VX 630	9NX 902 – 9NX 1600	5VX 710 – 5VX 1250	15NX 1803 – 15NX 3175
710 1212 2500	850 1557	1800	3000	3VX 375 – 3VX 670	9NX 952 – 9NX 1702	5VX 750 – 5VX 1320	15NX 1905 – 15NX 3353
730 1237 2540	857 1582	1850	3150	3VX 400 – 3VX 710	9NX 1016 – 9NX 1803	5VX 800 – 5VX 1400	15NX 2032 – 15NX 3556
737 1250 2650	882 1600	1900	3350	3VX 425 – 3VX 750	9NX 1079 – 9NX 1905		
750 1262 2690	900 1607	2000	3550	3VX 450 – 3VX 800	9NX 1143 – 9NX 2032		
762 1287 2800	907 1632	2020		3VX 475 – 3VX 850	9NX 1206 – 9NX 2159		
772 1312 2840	932 1650	2120		3VX 500 – 3VX 900	9NX 1270 – 9NX 2286		
787 1320 3000	950 1682	2150		3VX 530 – 3VX 950	9NX 1346 – 9NX 2413		
800 1337 3150	957 1700	2240		3VX 560 – 3VX 1000	9NX 1422 – 9NX 2540		
812 1362 3350	982 1732	2280		3VX 600 – 3VX 1060	9NX 1524 – 9NX 2692		
825 1387 3550	1000 1750	2360		3VX 630 – 3VX 1120	9NX 1600 – 9NX 2845		
837 1400	1007 1757	2400		3VX 670 – 3VX 1180	9NX 1702 – 9NX 2997		
850 1412	1030 1782	2500		3VX 710 – 3VX 1250	9NX 1803 – 9NX 3175		
862 1437	1060 1800	2650		3VX 750 – 3VX 1320	9NX 1905 – 9NX 3353		
875 1462	1082 1832	2680		3VX 800 – 3VX 1400	9NX 2032 – 9NX 3556		
887 1487	1107 1850	2800		3VX 850	9NX 2159		
900 1500	1120 1882	2840		3VX 900	9NX 2286		
912 1512	1132 1900	3000		3VX 950	9NX 2413		
925 1537	1157 1932	3150		3VX 1000	9NX 2540		
937 1562	1180 1950	3350		3VX 1060	9NX 2692		
950 1587	1207 1982	3550		3VX 1120	9NX 2845		
962 1600	1232 2000			3VX 1180	9NX 2997		
987 1612	1250 2120			3VX 1250	9NX 3175		
1000 1662	1257 2240			3VX 1320	9NX 3353		
1012 1700	1272 2360			3VX 1400	9NX 3556		
1037 1750	1282 2500						
1060 1762	1307 2650						
1077 1800	1320 2800						
1087 1850	1332 3000						
	1357 3150						
	1382 3350						
	1400 3550						
Weight: ≈ 0.062 kg/m	Weight: ≈ 0.091 kg/m	Weight: ≈ 0.174 kg/m	Weight: ≈ 0.323 kg/m	Weight: ≈ 0.062 kg/m		Weight: ≈ 0.174 kg/m	

Datum length L_d ≙ Pitch length L_w/L_p Further sizes on request

STANDARD RANGE

optibelt SUPER TX M=S V-BELTS – RAW EDGE, COGGED DIN 2215 / ISO 4184

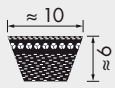

ZX/X10

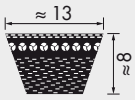

AX/X13

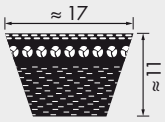

BX/X17

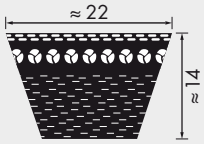

CX/X22

Profile ZX/X10		Profile AX/X13				Profile BX/X17				Profile CX/X22	
Belt no.	Datum length ISO L_d [mm]	Belt no.	Datum length ISO L_d [mm]	Belt no.	Datum length ISO L_d [mm]	Belt no.	Datum length ISO L_d [mm]	Belt no.	Datum length ISO L_d [mm]	Belt no.	Datum length ISO L_d [mm]
ZX 23	597	AX 23	605	AX 62	1605	BX 23	610	BX 67	1740	CX 39	1058•
ZX 24	622	AX 23½	630	AX 63	1630	BX 25	670	BX 69	1790	CX 43	1148•
ZX 25	652	AX 24	640	AX 67	1730	BX 26	690	BX 71	1840	CX 49	1308•
ZX 26	672	AX 25	660	AX 70	1805	BX 28	750	BX 73	1890	CX 52	1378•
ZX 27	692	AX 26½	700	AX 71	1830	BX 29	765	BX 75	1940	CX 55	1458•
ZX 28	732	AX 27	716	AX 75	1930	BX 30	790	BX 79	2040	CX 59	1558•
ZX 29	752	AX 28	740	AX 79	2030	BX 31	815	BX 88	2280	CX 62	1632•
ZX 29½	772	AX 29	760	AX 88	2270	BX 32	840	BX 93	2400	CX 67	1758•
ZX 31½	822	AX 30	797	AX 93	2390	BX 33	876	BX 98	2540	CX 68	1785•
ZX 32	842	AX 31	805	AX 98	2530•	BX 34	890	BX 103	2656•	CX 71	1858•
ZX 33	847	AX 32	843	AX 104	2680•	BX 34½	915	BX 104	2690•	CX 75	1958•
ZX 33½	872	AX 33	871	AX 110	2830•	BX 35	929	BX 110	2840•	CX 79	2058•
ZX 35	897	AX 34	880	AX 118	3030•	BX 36	940	BX 118	3040•	CX 81	2118•
ZX 36	922	AX 35	919	AX 124	3180•	BX 37	965	BX 124	3190•	CX 85	2217•
ZX 37	947	AX 35½	930	AX 132	3380•	BX 38	1005	BX 132	3390•	CX 88	2298•
ZX 38	972	AX 36	944			BX 39	1040			CX 90	2344•
ZX 40	1038•	AX 37	955			BX 40	1056			CX 93	2418•
ZX 42	1082•	AX 37½	980			BX 41	1080			CX 96	2496•
ZX 46½	1202•	AX 38	995			BX 42	1100			CX 98	2558•
ZX 52	1342•	AX 39	1030			BX 43	1130			CX 110	2858•
ZX 55	1422•	AX 40	1046			BX 44	1160			CX 118	3058•
ZX 59	1522•	AX 41½	1080			BX 45	1190			CX 124	3208•
		AX 42	1090			BX 45½	1203			CX 132	3408•
		AX 43	1130			BX 46	1215				
		AX 44	1150			BX 46½	1220				
		AX 45½	1180			BX 47	1240				
		AX 46	1198			BX 48	1255				
		AX 47	1230			BX 49	1290				
		AX 48	1250			BX 50	1315				
		AX 49	1280			BX 51	1340				
		AX 50	1300			BX 52	1360				
		AX 51	1330			BX 53	1390				
		AX 52	1350			BX 54	1412				
		AX 53	1380			BX 55	1440				
		AX 54	1405			BX 57	1490				
		AX 55	1430			BX 58	1513				
		AX 56	1452			BX 59	1540				
		AX 57	1480			BX 61	1590				
		AX 58	1505			BX 62	1615				
		AX 59	1530			BX 63	1640				
Weight: ≈ 0.062 kg/m		Weight: ≈ 0.099 kg/m				Weight: ≈ 0.165 kg/m				Weight: ≈ 0.276 kg/m	

Datum length L_d ≙ Pitch length L_w/L_p Further sizes on request • Non stock items

 © ARNTZ OPTIBELT GROUP, GERMANY

STANDARD RANGE

optibelt VARIO POWER VARIABLE SPEED BELTS – RAW EDGE, COGGED DIN 7719 / ISO 1604

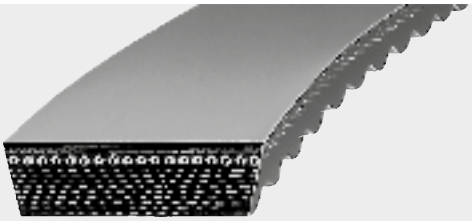

Profile/ inside length L_i [mm]	ISO designation (datum length) L_d
13 x 5	
468	
500	
17 x 5	
426	W 16 450
476	W 16 500
536	W 16 560
570	W 16 600
606	W 16 630
776	W 16 800
21 x 6	
530	W 20 560
600	W 20 630
610	W 20 640
675	W 20 710
770	W 20 800
870	W 20 900
970	W 20 1000
1220	W 20 1250
22 x 8	
485	
525	
565	
650	
700	
750	
800	
850	
900	
950	
1000	
1060	
1185	

Profile/ inside length L_i [mm]	ISO designation (datum length) L_d
26 x 8	
655	W 25 690
672	W 25 710
710	W 25 750
750	W 25 790
762	W 25 800
800	W 25 840
862	W 25 900
962	W 25 1000
1082	W 25 1120
28 x 8	
600	
650	
700	
750	
800	
850	
900	
950	
1000	
1060	
1120	
1180	
1250	
1320	
1400	
1500	
30 x 10	
650	
665	
700	
800	
850	
875	
900	
950	
1000	
1035	
1120	
1200	
1340	
1500	
1600	

Profile/ inside length L_i [mm]	ISO designation (datum length) L_d
32 x 10	
750	W 31,5 800
790	W 31,5 840
820	W 31,5 870
850	W 31,5 900
900	W 31,5 950
950	W 31,5 1000
1000	W 31,5 1050
1073	W 31,5 1120
1120	W 31,5 1170
1180	W 31,5 1230
1200	W 31,5 1250
1353	W 31,5 1400
37 x 10	
660	
800	
850	
900	
950	
1000	
1020	
1060	
1120	
1180	
1250	
1320	
1400	
1500	
1600	
1700	
1800	
41 x 13	
925	W 40 990
1000	W 40 1060
1040	W 40 1100
1060	W 40 1120
1120	W 40 1180
1180	W 40 1240
1190	W 40 1250
1250	W 40 1310
1340	W 40 1400
1440	W 40 1500
1600	W 40 1660
1740	W 40 1800
1940	W 40 2000

Profile/ inside length L_i [mm]	ISO designation (datum length) L_d
47 x 13	
1000	
1060	
1120	
1180	
1250	
1320	
1400	
1500	
1600	
1700	
1800	
52 x 16	
1180	W 50 1250
1250	W 50 1320
1325	W 50 1400
1400	W 50 1480
1525	W 50 1600
1600	W 50 1680
1725	W 50 1800
1925	W 50 2000
2165	W 50 2240
2240	W 50 2320
55 x 16	
1400	
1500	
1600	
1700	
1800	
65 x 20	
1706	W 63 1800
1906	W 63 2000

Profile/ inside length L_i [mm]	ISO designation (datum length) L_d
70 x 18	
1600	
1700	
1800	
1900	
2000	
2240	
2500	

Standard production data
Belt length up to 5000 mm L_i
Belt top width up to 100 mm
Belt height 5 to 25 mm
24° angle for profile 13 x 5; 17 x 5
30° angle for profile 52 x 16; 55 x 16; 65 x 20 and 70 x 18
27° angle for all other profiles. Sizes according to ARPM/MPTA as well as variable speed belts with angles from 22° to 42° can be produced on request. Minimum order quantities are required.

Further sizes as well as Double-sided variable speed belts on request

Tolerances
Length tolerance ± 1 % of the belt nominal length
Angle tolerance ± 1.5° of the nominal angle
Height tolerance ≤ 8 mm = ± 0.8 mm
> 8 to 20 mm = ± 1.0 mm
> 20 mm = ± 1.5 mm
Width tolerance ± 0.75 mm

STANDARD RANGE

optibelt VARIO POWER VARIABLE SPEED BELTS – RAW EDGE, COGGED ARPM/MPTA

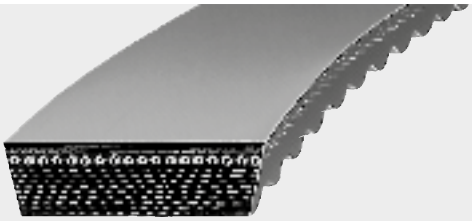

ARPM/MPTA designation	ARPM/MPTA designation	ARPM/MPTA designation	ARPM/MPTA designation
1422 V 235•	1922 V 751•	2530 V 934•	3230 V 630•
1422 V 240•	1922 V 756•	2530 V 990•	3230 V 670•
1422 V 270•			3230 V 710•
1422 V 290•	1926 V 250•	2830 V 337•	3230 V 723•
1422 V 300•	1926 V 275•	2830 V 363•	3230 V 750•
1422 V 330•	1926 V 290•	2830 V 366•	3230 V 800•
1422 V 340•	1926 V 407•	2830 V 367•	3230 V 850•
1422 V 360•	1926 V 415•	2830 V 393•	
1422 V 400•	1926 V 427•	2830 V 396•	3432 V 450•
1422 V 420•		2830 V 422•	3432 V 456•
1422 V 440•	2230 V 266•		3432 V 480•
1422 V 460•	2230 V 273•	2926 V 471•	3432 V 528•
1422 V 470•	2230 V 275•	2926 V 486•	3432 V 534•
1422 V 480•	2230 V 326•	2926 V 521•	
1422 V 540•	2230 V 375•	2926 V 546•	4036 V 541•
1422 V 600•	2322 V 329•	2926 V 574•	4036 V 574•
1422 V 660•	2322 V 347•	2926 V 586•	4430 V 530•
	2322 V 364•	2926 V 606•	4430 V 548•
1430 V 215•	2322 V 396•	2926 V 616•	4430 V 555•
	2322 V 421•	2926 V 636•	4430 V 560•
1922 V 277•	2322 V 434•	2926 V 646•	4430 V 570•
1922 V 282•	2322 V 441•	2926 V 666•	4430 V 578•
1922 V 298•	2322 V 461•	2926 V 686•	4430 V 600•
1922 V 321•	2322 V 481•	2926 V 726•	4430 V 610•
1922 V 332•	2322 V 486•	2926 V 750•	4430 V 630•
1922 V 338•	2322 V 521•	2926 V 776•	4430 V 652•
1922 V 363•	2322 V 541•	2926 V 786•	4430 V 660•
1922 V 381•	2322 V 601•		4430 V 670•
1922 V 386•	2322 V 661•	3226 V 392•	4430 V 690•
1922 V 403•	2322 V 681•	3226 V 400•	4430 V 700•
1922 V 426•	2322 V 701•	3226 V 433•	4430 V 710•
1922 V 443•	2322 V 801•	3226 V 450•	4430 V 730•
1922 V 454•		3226 V 505•	4430 V 750•
1922 V 460•	2426 V 353•	3226 V 545•	4430 V 790•
1922 V 484•	2426 V 363•	3226 V 585•	4430 V 800•
1922 V 526•		3226 V 603•	4430 V 850•
1922 V 544•	2530 V 500•	3226 V 650•	
1922 V 604•	2530 V 530•	3226 V 663•	4436 V 525•
1922 V 630•	2530 V 560•	3226 V 723•	4436 V 551•
1922 V 646•	2530 V 600•	3226 V 783•	4436 V 561•
1922 V 666•	2530 V 630•	3226 V 843•	4436 V 576•
1922 V 686•	2530 V 670•	3230 V 419•	4436 V 646•
1922 V 706•	2530 V 710•	3230 V 528•	4436 V 750•
1922 V 721•	2530 V 750•	3230 V 560•	
1922 V 726•	2530 V 790•	3230 V 585•	
	2530 V 800•	3230 V 600•	

Explanation (e.g. 1422 V 235)
14 = top width 14/16"
22 = angle
V = variable speed
235 = pitch length in 1/10"

• Non stock items – Minimum order quantity on request. Further sizes as well as Double-sided variable speed belts on request.

 © ARNTZ OPTIBELT GROUP, GERMANY

STANDARD RANGE

optibelt DK DOUBLE-SIDED V-BELTS DIN/ISO, ASAE

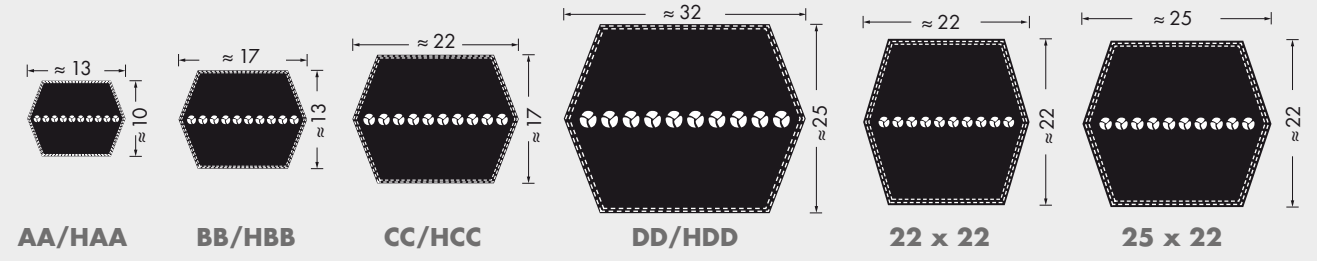

Profile AA/HAA		Profile BB/HBB				Profile CC/HCC		Profile DD/HDD	
Reference length [mm]	Belt no.	Reference length [mm]	Belt no.	Reference length [mm]	Belt no.	Reference length [mm]	Belt no.	Reference length [mm]	Belt no.
2000	77	1980	75	4040	156	2280	86	on request	
2032	78	2180	83	4200	162	2500	94		
2370	91	2300	88	4470	173	2800	106		
2500	96	2370	90	4500	174	3200	122		
2650	102	2500	95	4750	184	3310	126		
2667	103	2540	97	5000	194	3765	144		
2800	108	2600	99	5639	221	4000	153		
3300	128	2650	101			4216	162	Weight: ≈ 0.935 kg/m	
3920	152	2740	105			4300	165	**Profile 22 x 22**	
		2800	107			4500	173		
		2850	109			5000	193		
		2920	112			5300	204		
		3000	115			5340	206	5180	
		3030	116			5750	224	5220	
		3150	121					5850	
		3250	125					6270	
		3280	126						
		3325	128						
		3390	131					Weight: ≈ 0.511 kg/m	
		3450	133					**Profile 25 x 22**	
		3500	135						
		3550	137						
		3730	144						
		3750	145					on request	
		4010	155						
Weight: ≈ 0.150 kg/m		Weight: ≈ 0.250 kg/m				Weight: ≈ 0.440 kg/m		Weight: ≈ 0.625 kg/m	

Non-standard length ranges and special constructions:

Profile AA/HAA	1350 to 6000 mm
Profile BB/HBB	1350 to 12700 mm
Profile CC/HCC	1600 to 19500 mm
Profile DD/HDD	on request
Profile 22 x 22	on request
Profile 25 x 22	on request

Minimum order quantity for special constructions on request

Conversion factors from the belt number to the reference length:

Profile AA/HAA – Belt no. x 25.4 = mm + 53 mm

Profile BB/HBB – (up to belt no. 210)
Belt no. x 25.4 = mm + 74 mm
(over belt no. 210)
Belt no. x 25.4 = mm + 36 mm

Profile CC/HCC – (up to belt no. 210)
Belt no. x 25.4 = mm + 107 mm
(over belt no. 210)
Belt no. x 25.4 = mm + 56 mm

Profile DD/HDD – (up to belt no. 210)
Belt no. x 25.4 = mm + 132 mm
(over belt no. 210)
Belt no. x 25.4 = mm + 69 mm

PRODUCT DESCRIPTION

optibelt KS V-GROOVED PULLEYS – optibelt TB TAPER-BUSHES

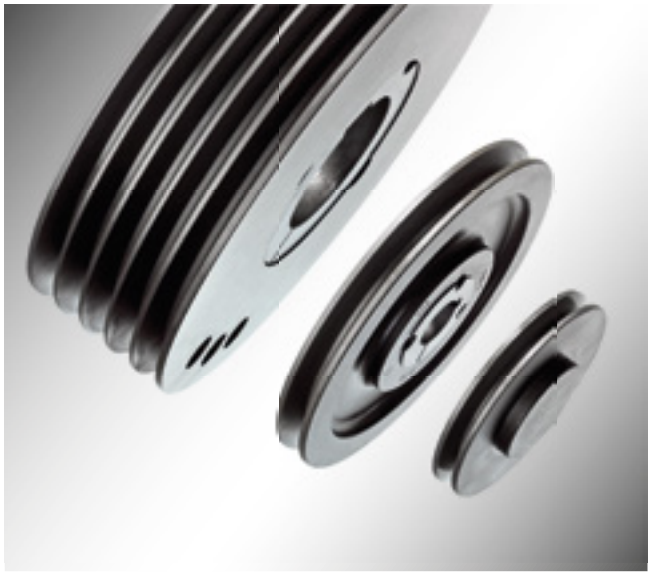

optibelt KS V-grooved pulleys
optibelt KS V-grooved pulleys are available with pilot bore and for taper bushes in all common belt profiles.

optibelt TB taper bushes
optibelt TB taper bushes are used for easy installations of pulleys on shafts with or without keyway.

 © ARNTZ OPTIBELT GROUP, GERMANY

PRODUCT DESCRIPTION
optibelt KS V-GROOVED PULLEYS, TYPES

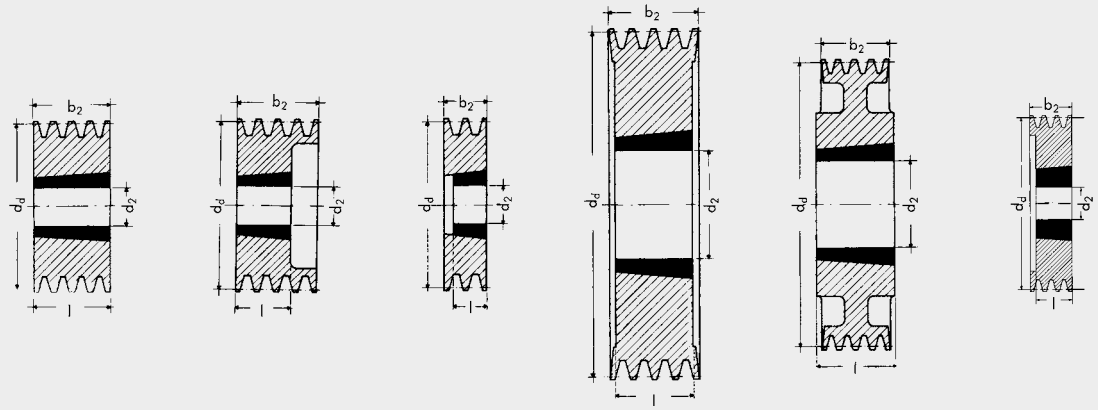

Type 1 Type 2 Type 3 Type 4 Type 5 Type 6

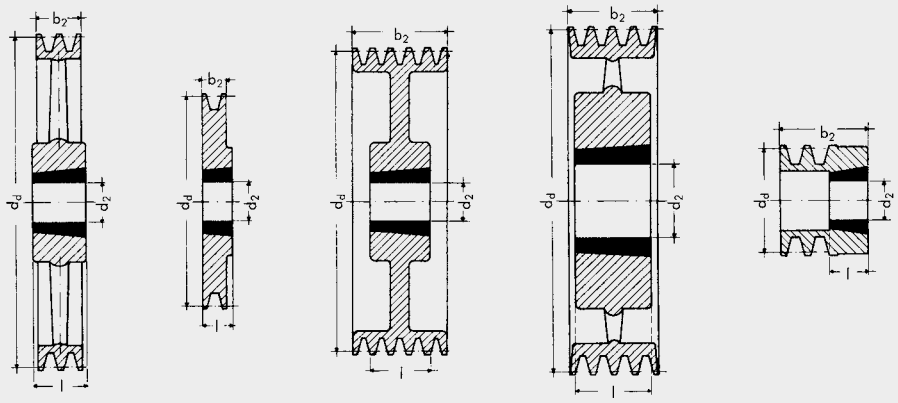

Type 7 Type 8 Type 9 Type 10 Type 11

We reserve the right to technical modifications.

Balancing

V-grooved pulleys are statically balanced in accordance with the guidelines in VDI 2060, as standard:
Quality level G 16; for dia. $d_d \leq 400$ mm at n =1500 rpm; for dia. $d_d > 400$ mm at v = 30 m/s.
The pulleys are balanced without keys on smooth balancing spindles. Machines whose runners are balanced with a keyway in the shaft end should be ordered as follows: "Balanced with pilot bore and empty keyway on smooth balancing spindles without key".

Balancing in one plane to quality level G 6.3 on request. We recommend balancing in two planes according to quality level G 6.3, or finer when v > 30 m/s or the ratio of datum diameter to face width $d_d : b_2$ is < 4 at v > 20 m/s. In such cases, the operational speed of the pulley must be given.

Special pulleys and customised pulleys on request

PRODUCT DESCRIPTION
optibelt KS V-GROOVED PULLEYS, STANDARDS – DESIGN CRITERIA – TYPES

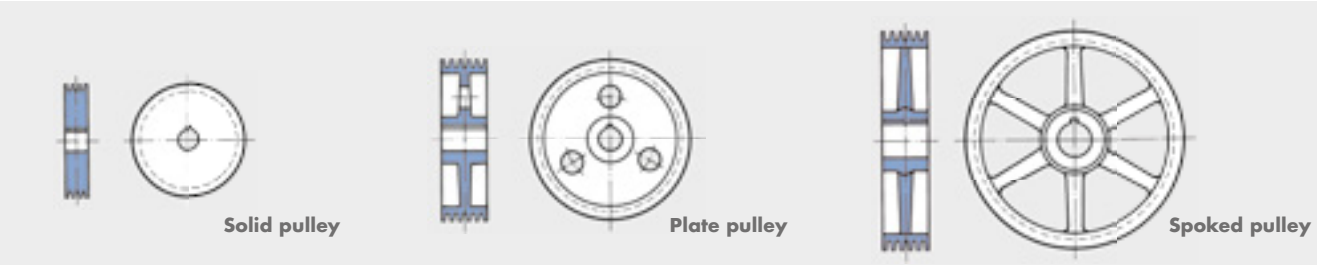

An essential component in V-belt drive systems is the V-belt pulley, or in short V-pulley. They are primarily manufactured from cast iron EN-GJL-200-DIN EN 1561 and are available with a pilot hole, pre-fabricated hole or with a clamping bush system. The DIN standard as well as the most important national pulley standards of all industrial nations are based upon the ISO 4183 standard "Grooved Pulleys for Classic V-Belts and Wedge Belts".
V-belt pulleys with grooves for wedge belts according to DIN 7753 Part 1 are also suitable for classic V-belts with the same datum width b_d according to DIN 2215. These are known as dual duty pulleys.

Example

	Belt		Grooved pulleys
Profile	SPZ	Z/10	SPZ – Z/10
Top width	$b_o \approx 9.7$	$b_o \approx 10$	$b_1 \approx 9.7$
Datum width	$b_d = 8.5$		$b_d = 8.5$
Belt height/ groove depth	$h \approx 8$	$h \approx 6$	$t_{min} = 11$

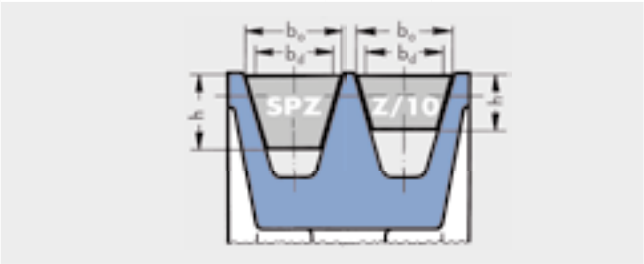

When selecting a pulley, the following criteria should be taken into account:

- Use standard pulley diameters.
  If design considerations make this impossible, a standard diameter should, as a minimum requirement, be selected for the largest pulley in the drive.
- Do not select a pulley smaller than the recommended size to ensure a longer operational life and overall drive efficiency.
- If manufacturing your own pulleys, the overall shape and processing must conform to the relevant standards.
- Grooved pulleys are generally balanced in one plane (statically) to quality level Q 16 as in VDI 2060.
- Balancing in two planes (dynamically), quality level Q 6.3 becomes necessary if:
  1. $v > 30$ m/s or
  2. the ratio of datum diameter to pulley face width $d_d : b_2 < 4$ at $v > 20$ m/s.

Note: The timely replacement of pulleys damaged by corrosion or erosion prevents premature failure of the belts. Furthermore, it is important to prevent the belt basis from direct contact with the groove basis as this can quickly lead to damage and premature failure (exception: special drives such as V-flat drives).

Deep grooved pulleys

Deep grooved pulleys are employed for special drive situations such as
- the use of guide idlers,
- twist drives or
- drives subject to severe vibration.

The increased groove top width "b_1" and depth "t" of deep grooved pulleys improves the running characteristics of the belt, particularly when entering the groove. Turning over and running out of the belt are prevented.

Deep grooved pulleys are not suitable for the use with kraftbands.

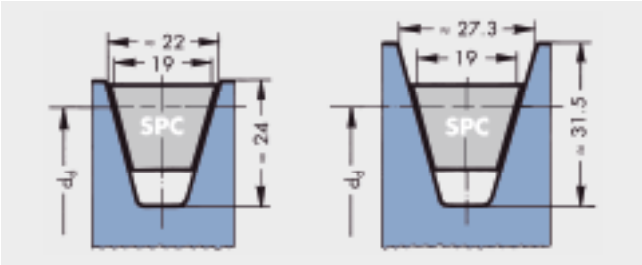

 © ARNTZ OPTIBELT GROUP, GERMANY

STANDARD RANGE

optibelt KS V-GROOVED PULLEYS DIN 2211 SHEET 1 FOR WEDGE BELTS AND DIN 2217 SHEET 1 FOR CLASSIC V-BELTS

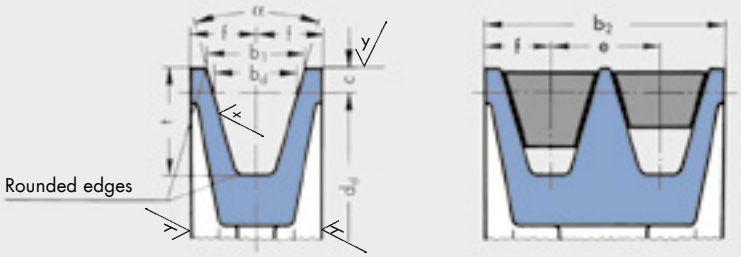

$\sqrt{x} = \sqrt{R_z\ 25}$

$\sqrt{y} = \sqrt{R_z\ 100}$

Table 14

V-belt profile	ISO designation	–	Y*	–	Z*	A*	B*	–	C*	–	D	E
	DIN 2215	5	6	8	10	13	17	20	22	25	32	40
Wedge belt profile	DIN 7753 Part 1 and ISO	–	–	–	SPZ*	SPA*	SPB*	–	SPC*	–	–	–
b_d		4.2	5.3	6.7	8.5	11.0	14.0	17.0	19.0	21.0	27.0	32.0
$b_1 \approx$		5.0	6.3	8.0	9.7	12.7	16.3	20.0	22.0	25.0	32.0	40.0
c		1.3	1.6	2.0	2.0	2.8	3.5	5.1	4.8	6.3	8.1	12.0
e		6 ± 0.3	8 ± 0.3	10 ± 0.3	12 ± 0.3	15 ± 0.3	19 ± 0.4	23 ± 0.4	25.5 ± 0.5	29 ± 0.5	37 ± 0.6	44.5 ± 0.7
f		5 ± 0.5	6 ± 0.5	7 ± 0.6	8 ± 0.6	10 ± 0.6	12.5 ± 0.8	15 ± 0.8	17 ± 1.0	19 ± 1.0	24 ± 2.0	29 ± 2.0
t	Endless V-belts	6 + 0.6 0	7 + 0.6 0	9 + 0.6 0	11 + 0.6 0	14 + 0.6 0	18 + 0.6 0	18 + 0.6 0	24 + 0.6 0	22 + 0.6 0	28 + 0.6 0	33 + 0.6 0
	Open-ended V-belts DIN 2216							21 + 0.6 0		26 + 0.6 0	33 + 0.6 0	38 + 0.6 0
$d_{d\,min}$	V-belts	20	28	40	50	71	112	160	180	250	355	500
	Wedge belts	–	–	–	63	90	140	–	224	–	–	–
α		32° ± 1° $d_d \leq 50$	32° ± 1° $d_d \leq 63$	32° ± 1° $d_d \leq 75$	–	–	–	–	–	–	–	–
		–	–	–	34° ± 1° $d_d \leq 80$	34° ± 1° $d_d \leq 118$	34° ± 1° $d_d \leq 190$	34° ± 1° $d_d \leq 250$	34° ± 1° $d_d \leq 315$	34° ± 1° $d_d \leq 355$	–	–
		36° ± 1° $d_d > 50$	36° ± 1° $d_d > 63$	36° ± 1° $d_d > 75$	–	–	–	–	–	–	36° ± 30′ $d_d \leq 500$	36° ± 30′ $d_d \leq 630$
		–	–	–	38° ± 1° $d_d > 80$	38° ± 1° $d_d > 118$	38° ± 1° $d_d > 190$	38° ± 1° $d_d > 250$	38° ± 30′ $d_d > 315$	38° ± 30′ $d_d > 355$	38° ± 30′ $d_d > 500$	38° ± 30′ $d_d > 630$
Face width b_2 for number of grooves z $b_2 = (z - 1)\,e + 2\,f$	1	10.0	12.0	14.0	16.0	20.0	25.0	30.0	34.0	38.0	48.0	58.0
	2	16.0	20.0	24.0	28.0	35.0	44.0	53.0	59.5	67.0	85.0	102.5
	3	22.0	28.0	34.0	40.0	50.0	63.0	76.0	85.0	96.0	122.0	147.0
	4	28.0	36.0	44.0	52.0	65.0	82.0	99.0	110.5	125.0	159.0	191.5
	5	34.0	44.0	54.0	64.0	80.0	101.0	122.0	136.0	154.0	196.0	236.0
	6	40.0	52.0	64.0	76.0	95.0	120.0	145.0	161.5	183.0	233.0	280.5
	7		60.0	74.0	88.0	110.0	139.0	168.0	187.0	212.0	270.0	325.0
	8			84.0	100.0	125.0	158.0	191.0	212.5	241.0	307.0	369.5
	9				112.0	140.0	177.0	214.0	238.0	270.0	344.0	414.0
	10					155.0	196.0	237.0	263.5	299.0	381.0	458.5
	11						215.0	260.0	289.0	328.0	418.0	503.0
	12							283.0	314.5	357.0	455.0	547.5

(values in mm)

* These V-grooved pulleys are also suitable for optibelt SUPER TX M=S V-belts, optibelt SUPER E-POWER M=S and optibelt SUPER X-POWER M=S.

STANDARD RANGE

optibelt KS V-GROOVED PULLEYS DIN 2211 SHEET 1 FOR WEDGE BELTS AND DIN 2217 SHEET 1 FOR CLASSIC V-BELTS

Table 15

V-belt profile	ISO designation	–	Y	–	Z	A	B	–	C	–	D	E	Datum diameter d_d		Radial and axial run-out tolerance
	DIN 2215	5	6	8	10	13	17	20	22	25	32	40			
Wedge belt profile	DIN 7753 Part 1 and ISO 4184	–	–	–	SPZ	SPA	SPB	–	SPC	–	–	–	min.	max.	
Datum diameter d_d		20.0 22.0 25.0 28.0 31.5 35.5 40.0	28.0 31.5 35.5 40.0	40	40■•								20.0 22.0 25.0 28.0 31.5 35.5 40.0	20.4 22.4 25.4 28.4 32.0 36.1 40.6	0.2
		45.0 50.0 56.0 63.0	45.0 50.0 56.0 63.0	45 50 56 63	**45■•** **50■•** **56■•** **63** **67**	**63■** **67■•**							45.0 50.0 56.0 63.0 67.0	45.7 50.8 56.9 64.0 68.0	
		71.0 80.0	71.0 80.0 90.0 100.0	71 80 90 100	**71■•** **75■•** **80■•** **85■•** **90** **95** **100** **106**	**71■•** **75■•** **80■•** **85■•** **90** **95** **100** **106**	**90■•** **95■•** **100■•** **106■•**						71.0 75.0 80.0 85.0 90.0 95.0 100.0 106.0	72.1 76.1 81.3 86.3 91.4 96.4 101.6 107.6	
			112.0 125.0	112 125 140 160	**112** **118** **125** **132** **140** **150** **160**	**112** **118** **125** **132** **140** **150** **160**	**112■•** **118■•** **125■•** **132■•** **140** **150** **160**	160	140• 150• 160•				112.0 118.0 125.0 132.0 140.0 150.0 160.0	113.8 119.9 127.0 134.1 142.2 152.4 162.6	0.3
				180 200	**170** **180** **190** **200** **212** **224**	**170** **180** **190** **200** **212** **224** **225** **236** **250**	**170** **180** **190** **200** **212** **224** **225** **236** **250** **265**	180 200 224 250	**180■•** 190■• **200■•** **212■•** **224** **225** **236** **250** **265**	250			170.0 180.0 190.0 200.0 212.0 224.0 225.0 236.0 250.0 265.0	172.7 182.9 193.0 203.2 215.4 227.6 228.6 239.8 254.0 269.0	0.4
					280 **300** **315** **355** **400**	**280** **300** **315** **355** **400**	**280** **300** **315** **335** **355** **375** **400** **425**	280 315 355 400	**280** **300** **315** **335** **355** **375** **400** **425**	280 315 355 400	355 400		280.0 300.0 315.0 335.0 355.0 375.0 400.0 425.0	284.5 304.8 320.0 340.0 360.7 380.7 406.4 431.4	0.5
					450 **500** **560** **630**	**450** **500** **560** **630**	**450** **500** **560** **630**	450 500 560 630	**450** **475** **500** **560** **630**	450 500 560 630	450 500 560 630	500 560 630	450.0 475.0 500.0 560.0 630.0	457.2 482.2 508.0 569.0 640.1	0.6
					710	710 800 900 1000	**710** **800** **900** **1000**	710 800 900 1000	**710** **800** 900 **1000**	710 800 900 1000	710 800 900 1000	710 800 900 1000	710.0 800.0 900.0 1000.0	721.4 812.8 914.4 1016.0	0.8
								1120 1250 1400 1600	1120 **1250** 1400 1600	1120 1250 1400 1600	1120 1250 1400 1600	1120 1250 1400 1600	1120.0 1250.0 1400.0 1600.0	1137.9 1270.0 1422.4 1625.6	1.0
								1800 2000	1800 2000	1800 2000	1800 2000	1800 2000	1800.0 2000.0	1828.8 2032.0	1.2
Allowed deviation of the datum diameters of the grooves in relation to one another [mm]		0.3			0.4			0.6					—		

For further details see standard DIN 2211 Page 1 and DIN 2217 Page 1. These V-grooved pulleys are also suitable for optibelt SUPER TX and optibelt SUPER X-POWER M=S V-belts. Preferred datum diameters in **bold** type. ■ Only for classic V-belts, raw edge • For optibelt SUPER X-POWER M=S wedge belts

 © ARNTZ OPTIBELT GROUP, GERMANY

STANDARD RANGE
optibelt KS V-GROOVED PULLEYS ARPM/MPTA FOR WEDGE BELTS

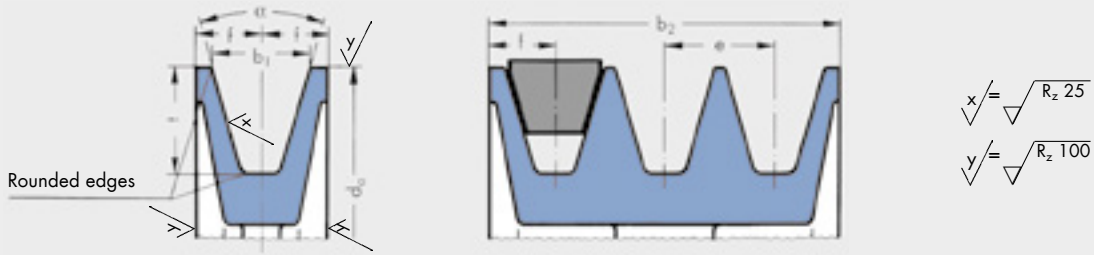

Table 16

Belt profile ARPM/MPTA		3V/9N	5V/15N	8V/25N
b_1		8.89 ± 0.13	15.24 ± 0.13	25.40 ± 0.13
e		10.30 ± 0.40	17.50 ± 0.40	28.60 ± 0.40
f		$9.00^{+2.00}_{-1.00}$	$13.00^{+3.00}_{-1.00}$	$19.00^{+6.00}_{-2.00}$
t_{min}		8.6	15.0	25.1
$d_{a\ min}$		67	151	315
α		36° ± 25′ d_a 63 to 90	— —	— —
		38° ± 25′ d_a > 90 to 150	38° ± 25′ d_a 140 to 255	38° ± 25′ 315 to 405
		40° ± 25′ d_a > 150 to 305	40° ± 25′ d_a > 255 to 405	40° ± 25′ d_a > 405 to 570
		42° ± 25′ d_a > 305	42° ± 25′ d_a > 405	42° ± 25 d_a > 570
Face width b_2 for number of grooves z: $b_2 = (z - 1)\ e + 2\ f$	**1**	18.0	26.0	38.0
	2	28.3	43.5	66.6
	3	38.6	61.0	95.2
	4	48.9	78.5	123.8
	5	59.2	96.0	152.4
	6	69.5	113.5	181.0
	7	79.8	131.0	209.6
	8	90.1	148.5	238.2
	9	100.4	166.0	266.8
	10	110.7	183.5	295.4
	11	121.0	201.0	324.0
	12	131.3	218.5	352.6
			(values in mm)	

For drives with several grooves the total of all deviations from the nominal value e for all groove distances of a pulley ± 0.8 mm must not be exceeded. For further details see ARPM/MPTA.

Note
The allowed variations of V-grooved pulleys according to ARPM/MPTA deviate only slightly from the values contained in ISO 5290 "Grooved pulleys for joint narrow V-belts (Kraftbands)". Therefore, optibelt KB kraftbands can be used in V-grooved pulleys manufactured according to both standards. These V-grooved pulleys are also suitable for optibelt SUPER X-POWER M=S V-belts.

STANDARD RANGE
optibelt KS V-GROOVED PULLEYS FOR KRAFTBANDS

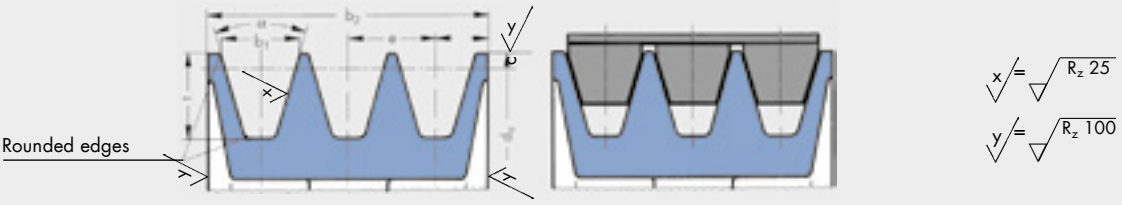

Table 17: V-grooved pulleys for kraftbands with wedge belts ISO 5290

Profile	d_a	α° ± 30′	b_1 ≈	δh_{1max}	δh_{2max}	t_{min}	e	Tol e[1]	Σ Tol e[2]	f_{min}	$d_{a\,min}$
3V/9J	67 to 90 > 90 to 150 > 150 to 300 > 300	36 38 40 42	8.9	0.20	0.30	8.9	10.3	± 0.25	± 0.5	9	84 (3VX) 63
5V/15J	180 to 250 > 250 to 400 > 400	38 40 42	15.2	0.25	0.40	15.2	17.5	± 0.25	± 0.5	13	191 (5VX) 140
8V/25J	315 to 400 > 400 to 560 > 560	38 40 42	25.4	0.30	0.50	25.4	28.6	± 0.40	± 0.8	19	355

For further details please see standard ISO 5290.
1) Tolerance for the centre distance "e" of two adjacent grooves.
2) The sum of all deviations from the nominal dimension "e" for all groove distances of a pulley must not exceed the given tolerance.

The international standard ISO 5290 specifies pulley groove dimensions for belt profiles 3V/9J, 5V/15J, 8V/25J.
The groove top width "b_1" is used as the basic reference dimension for standardisation of the grooves and joint V-belts. The pulley groove and joint V-belts are considered as a single unit in the standard ISO 5290.
The values δh_1 and δh_2 were chosen to ensure that

1. the top cover of the joint belt has no contact with the outside pulley diameter, in order to prevent the separation of the top cover.
2. the ribs are nevertheless still deep enough inside the pulley in order to ensure an optimum power transmission.

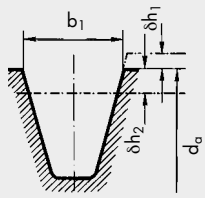

b_1 = effective width
d_a = effective outside diameter

The groove faces must be straight at least to a level of $d_a - 2\,\delta h_2$.

Table 18: V-grooved pulleys for kraftbands with wedge belts profiles SPZ, SPA, SPB and SPC according to DIN 2211/ ISO 4183

Profile	d_d	α° ± 30′	b_1 ≈	c	t_{min}	e	Tol e[1]	Σ Tol e[2]	f_{min}	$d_{d\,min}$
SPZ	71 to 80 > 80	34 38	9.7	2.0	11	12.0	± 0.3	± 0.6	8.0	80
SPA	100 to 118 > 118	34 38	12.7	2.8	14	15.0	± 0.3	± 0.6	10.0	112 (XPA) 90
SPB	160 to 190 > 190	34 38	16.3	3.5	18	19.0	± 0.4	± 0.8	12.5	180 (XPB) 140
SPC	250 to 315 > 315	34 38	22.0	4.8	24	25.5	± 0.4	± 0.8	17.0	250

 © ARNTZ OPTIBELT GROUP, GERMANY

STANDARD RANGE
optibelt KS V-GROOVED PULLEYS FOR KRAFTBANDS

Table 19: V-grooved pulleys for kraftbands with classic V-belts ISO 5291/ASAE S211.5

Profile	d_a	α° ± 30′	b_1 ≈	δh_{1max}	δh_{2max}	c	t_{min}	e	Tol e[1]	Σ Tol e[2]	f_{min}	$d_{d\,min}$
AJ/HA	80 to 125 > 125	34 38	13.0	0.20	0.35	1.5	12.0	15.88	± 0.3	± 0.6	9.0	80
BJ/HB	130 to 195 > 195	34 38	16.5	0.25	0.40	2.0	14.0	19.05	± 0.4	± 0.8	11.5	130
CJ/HC	210 to 325 > 325	34 38	22.4	0.30	0.45	3.0	19.0	25.40	± 0.5	± 1.0	16.0	210
DJ/HD	370 to 490 > 490	36 38	32.8	0.30	0.55	4.5	26.0	36.53	± 0.6	± 1.2	23.0	370

1) Tolerance for the centre distance "e" of two adjacent grooves.
2) The sum of all deviations from the nominal dimension "e" for all groove distances of a pulley must not exceed the given tolerance.

Table 20: Pulley width ranges for kraftbands

Profile	3V/9J	5V/15J	8V/25J	SPZ	SPA	SPB	SPC	AJ/HA	BJ/HB	CJ/HC	DJ/HD
Number of grooves	Face width b_2 for number of grooves z $b_2 = (z - 1)\,e + 2\,f$										
2	28.30	43.50	66.60	28.00	35.00	44.00	59.50	33.88	42.05	57.40	82.53
3	38.60	61.00	95.20	40.00	50.00	63.00	85.00	49.76	61.10	82.80	119.06
4	48.90	78.50	123.80	52.00	65.00	82.00	110.50	65.64	80.15	108.20	155.59
5	59.20	96.00	152.40	64.00	80.00	101.00	136.00	81.52	99.20	133.60	192.12
6	69.50	113.50	181.00	76.00	95.00	120.00	161.50	97.40	118.25	159.00	228.65
7	79.80	131.00	209.60	88.00	110.00	139.00	187.00	113.28	137.30	184.40	265.18
8	90.10	148.50	238.20	100.00	125.00	158.00	212.50	129.16	156.35	209.80	301.71
9	100.40	166.00	266.80	112.00	140.00	177.00	238.00	145.04	175.40	235.20	338.24
10	110.70	183.50	295.40	124.00	155.00	196.00	263.50	160.92	194.45	260.60	374.77
11	121.00	201.00	324.00	136.00	170.00	215.00	289.00	176.80	213.50	286.00	401.30
12	131.30	218.50	352.60	148.00	185.00	234.00	314.50	192.68	232.55	311.40	447.83
13	141.60	236.00	381.20	160.00	200.00	253.00	340.00	208.56	251.60	336.80	484.36
14	151.90	253.50	409.80	172.00	215.00	272.00	365.50	224.44	270.65	362.20	520.89
15	162.20	271.00	438.40	184.00	230.00	291.00	391.00	240.32	289.70	387.60	557.42
16	172.50	288.50	467.00	196.00	245.00	310.00	416.50	256.20	308.75	413.00	593.95
17	182.80	306.00	495.60	208.00	260.00	329.00	442.00	272.08	327.80	438.40	630.48
18	193.10	323.50	524.20	220.00	275.00	348.00	467.50	287.96	346.85	463.80	667.01
19	203.40	341.00	552.80	232.00	290.00	367.00	493.00	303.84	365.90	489.20	703.54
20	213.70	358.50	581.40	244.00	305.00	386.00	518.50	319.72	384.95	514.60	740.07
21	224.00	376.00	610.00	256.00	320.00	405.00	544.00	335.60	404.00	540.00	776.60
22	234.30	393.50	638.60	268.00	335.00	424.00	569.50	351.48	423.05	565.40	813.13
23	244.60	411.00	667.20	280.00	350.00	443.00	595.00	367.36	442.10	590.80	849.66
24	254.90	428.50	695.80	292.00	365.00	462.00	620.50	383.24	461.15	616.20	886.19
25	265.20	446.00	724.40	304.00	380.00	481.00	646.00	399.12	480.20	641.60	922.72
26	275.50	463.50	753.00	316.00	395.00	500.00	671.50	415.00	499.25	667.00	959.25
27	285.80	481.00	781.60	328.00	410.00	519.00	697.00	430.88	518.30	692.40	995.78
28	296.10	498.50	810.20	340.00	425.00	538.00	722.50	446.76	537.35	717.80	1032.31
29	306.40	516.00	838.80	352.00	440.00	557.00	748.00	462.64	556.40	743.20	1068.84
30	316.70	533.50	867.40	364.00	455.00	576.00	773.50	478.52	575.45	768.60	1105.37
31	327.00	551.00	896.00	376.00	470.00	595.00	799.00	494.40	594.50	794.00	1141.90
32	337.30	568.50	924.60	388.00	485.00	614.00	824.50	510.28	613.55	819.40	1178.43
33	347.60	586.00	953.20	400.00	500.00	633.00	850.00	526.16	632.60	844.80	1214.96
34	357.90	603.50	981.80	412.00	515.00	652.00	875.50	542.04	651.65	870.20	1251.49
35	368.20	621.00	1010.40	424.00	530.00	671.00	901.00	557.92	670.70	895.60	1288.02
36	378.50	638.50	1039.00	436.00	545.00	690.00	926.50	573.80	689.75	921.00	1324.55
37	388.80	656.00	1067.60	448.00	560.00	709.00	952.00	589.68	708.80	946.40	1361.08
38	399.10	673.50	1096.20	460.00	575.00	728.00	977.50	605.56	727.85	971.80	1397.61
39	409.40	691.00	1124.80	472.00	590.00	747.00	1003.00	621.44	746.90	997.20	1434.14
40	419.70	708.50	1153.40	484.00	605.00	766.00	1028.50	637.32	765.95	1022.60	1470.67

For KB sets please note the systematical classification.

STANDARD RANGE
OPTIBELT DEEP GROOVED PULLEYS

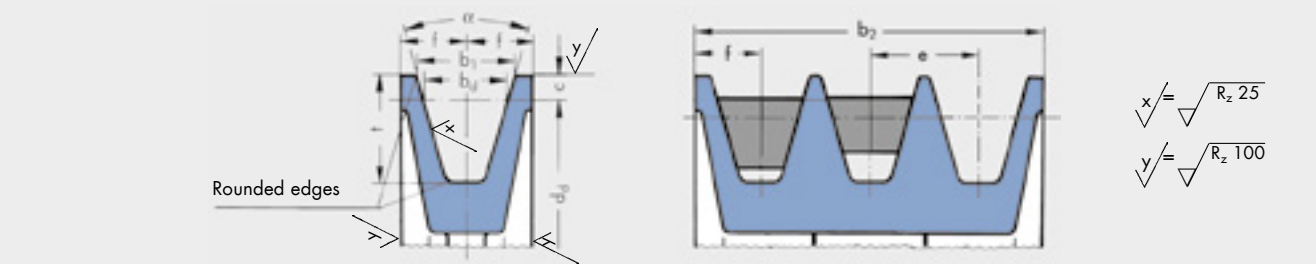

Table 21

Profile DIN 7753 Part 1/ISO	**SPZ**	**SPA**	**SPB**	**SPC**
Suitable for V-belts DIN 2215 and 2216	10	13	17	22
b_d	8.5	11.0	14.0	19.0
$b_1 \approx$	11.0	15.0	18.9	26.3
	11.3	15.4	19.5	27.3
c	4.0	6.5	8.0	12.0
e	14 ± 0.3	18 ± 0.3	23.0 ± 0.4	31 ± 0.5
f	8 ± 0.6	10 ± 0.6	12.5 ± 0.8	17 ± 1.0
t_{min}	13	18	22.5	31.5
α	34° ± 1° d_d 63 to 80	34° ± 1° d_d 90 to 118	34° ± 1° d_d 140 to 190	34° ± 30′ d_d 224 to 315
	38° ± 1° d_d > 80	38° ± 1° d_d >118	38° ± 1° d_d > 190	38° ± 30′ d_d > 315
α	34° ± 1° d_d 50 to 80	34° ± 1° d_d 71 to 118	34° ± 1° d_d 112 to 190	34° ± 30′ d_d 180 to 315
	38° ± 1° d_d > 80	38° ± 1° d_d >118	38° ± 1° d_d > 190	38° ± 30′ d_d > 315
Face width b_2 for number of grooves z: $b_2 = (z - 1)\ e + 2\ f$ — **1**	16	20	25	34
2	30	38	48	65
3	44	56	71	96
4	58	74	94	127
5	72	92	117	158
6	86	110	140	189
7	100	128	163	220
8	114	146	186	251
9	128	164	209	282
10	142	182	232	313
11	160	200	255	344
12	174	218	278	375

Please note the respective minimum pulley diameters.
Attention: Kraftbands are **not** suitable for deep grooved pulleys.

 © ARNTZ OPTIBELT GROUP, GERMANY

STANDARD RANGE

optibelt KS V-GROOVED PULLEYS FOR TAPER BUSHES – GROOVE ACCORDING TO DIN 2211

Profile SPZ/Z/10

Datum diameter d_d [mm]	Number of grooves	Design		Weight without bushes [≈ kg]	Taper bush
50▲◆	1	●	11	0.3	1008
	2	●	11	0.4	1008
56▲◆	1	●	11	0.4	1008
	2	●	11	0.5	1108
60▲◆■	1	●	8	0.2	1008
	2	●	11	0.6	1108
63	1	●	8	0.2	1108
	2	●	6	0.3	1108
	3	●	6	0.4	1108
67	1	●	8	0.3	1108
	2	●	6	0.4	1108
	3	●	6	0.5	1108
71	1	●	8	0.3	1108
	2	●	6	0.4	1108
	3	●	6	0.6	1108
75	1	●	8	0.4	1108
	2	●	6	0.4	1210
	3	●	6	0.5	1210
80	1	●	8	0.5	1210
	2	●	6	0.6	1210
	3	●	6	0.7	1210
	4	●	6	0.8	1210
85	1	●	8	0.6	1210
	2	●	6	0.5	1610
	3	●	6	0.6	1610
	4	●	6	0.9	1610
	5	●	6	1.0	1610
90	1	●	8	0.7	1210
	2	●	6	0.7	1610
	3	●	6	0.8	1610
	4	●	6	1.0	1610
	5	●	6	1.2	1610
95	1	●	8	0.7	1210
	2	●	6	0.8	1610
	3	●	6	0.9	1610
	4	●	6	1.1	1610
	5	●	6	1.3	1610
100	1	●	8	0.8	1210
	2	●	6	0.9	1610
	3	●	6	1.1	1610
	4	●	6	1.1	1610
	5	●	6	1.3	2012
	6*	●	6	1.4	2012
106	1	●	8	0.9	1610
	2	●	6	1.1	1610
	3	●	6	1.3	1610
	4	●	6	1.3	1610
	5	●	6	1.5	2012
	6*	●	6	1.6	2012
112	1	●	8	1.0	1610
	2	●	6	1.3	1610
	3	●	6	1.3	2012
	4	●	6	1.5	2012
	5	●	6	1.8	2012
	6*	●	6	1.9	2012
118	1	●	8	0.9	1610
	2	●	6	1.3	1610
	3	●	6	1.6	2012
	4	●	6	1.8	2012
	5	●	6	1.8	2012
	6*	●	6	2.0	2517
125	1	●	8	1.0	1610
	2	●	6	1.4	1610
	3	●	2	1.8	2012
	4	●	2	2.2	2012
	5	●	6	2.3	2012
	6*	●	6	2.5	2517
132	1	●	8	1.1	1610
	2	●	6	1.5	1610
	3	●	2	2.3	2012
	4	●	2	2.5	2012
	5	●	6	2.7	2517
	6*	●	6	2.9	2517
140	1	●	8	1.2	1610
	2	●	2	1.7	1610
	3	●	2	2.6	2012
	4	●	2	2.9	2012
	5	●	2	3.2	2517
	6*	●	2	3.5	2517
	8*	●	4	4.0	2517
150	1	●	8	1.2	1610
	2	●	8	2.0	2012
	3	●	2	3.1	2012
	4	●	2	3.7	2517
	5	●	2	4.0	2517
	6*	●	2	4.4	2517
	8*	●	4	5.1	2517

▲ for profile 10 ◆ for profile ZX/X10 ■ for profile XPZ

Number of grooves z	1	2	3	4	5	6	8
Face width b_2 [mm]	16	28	40	52	64	76	100

Taper bush	1008	1108	1210	1610	2012	2517
Bore d_2 [mm] from … to …	10-25	10-28	11-32	14-42	14-50	16-60

● Solid pulley
○ Plate pulley (with or without holes)
× Spoked pulley
Material: EN-GJL-200 (GG 20)
DIN EN 1561

* Non stock items

Bore diameter d_2 see page 72

STANDARD RANGE

optibelt KS V-GROOVED PULLEYS FOR TAPER BUSHES – GROOVE ACCORDING TO DIN 2211

Profile SPZ/Z/10

Datum diameter d_d [mm]	Number of grooves	Design		Weight without bushes [≈ kg]	Taper bush
160	1	●	8	1.3	1610
	2	●	8	2.5	2012
	3	●	2	3.6	2012
	4	●	2	4.4	2517
	5	●	2	4.8	2517
	6*	●	2	5.2	2517
	8*	●	4	5.6	2517
170	1	●	8	1.5	1610
	2	●	8	2.5	2012
	3	O	9	4.2	2012
	4	●	2	5.3	2517
	5	●	2	5.9	2517
	6*	●	2	6.5	2517
180	1	●	8	1.6	1610
	2	●	8	2.5	2012
	3	O	9	4.8	2012
	4	O	9	6.1	2517
	5	O	9	6.3	2517
	6*	O	9	6.8	2517
	8*	●	4	7.1	3020
190	1	●	8	1.8	1610
	2	●	8	2.6	2012
	3	O	9	4.9	2012
	4	O	9	5.3	2517
	5	O	9	6.3	2517
	6*	O	9	6.9	2517
200	1	●	8	2.3	2012
	2	●	8	2.8	2012
	3	O	9	3.5	2012
	4	O	9	4.7	2517
	5	O	9	5.5	2517
	6*	O	9	6.1	2517
	8*	●	4	9.3	3020
224	1	O	5	2.5	2012
	2	O	5	3.2	2012
	3	O	9	3.9	2012
	4	O	9	5.2	2517
	5	O	9	6.0	2517
	6*	O	9	6.6	2517
	8*	●	4	11.8	3020
250	1	x	7	2.8	2012
	2	x	7	3.5	2012
	3	x	10	4.3	2012
	4	x	10	5.7	2517
	5	x	10	7.0	2517
	6	x	10	7.0	2517
	8*	x	10	10.5	3020
280	1	x	7	2.9	2012
	2	x	7	4.0	2012
	3	x	7	5.3	2517
	4	x	10	6.4	2517
	5	x	10	7.1	2517
	6*	x	10	7.8	2517
	8*	x	10	10.8	3020
315	1	x	7	3.1	2012
	2	x	7	4.2	2012
	3	x	7	6.1	2517
	4	x	10	7.6	2517
	5	x	10	8.6	2517
	6*	x	10	9.3	2517
355	1	x	7	3.5	2012
	2	x	7	5.1	2012
	3	x	7	7.3	2517
	4	x	10	8.9	2517
	5	x	10	10.0	2517
	6*	x	10	10.7	2517
	8*	x	10	16.0	3030
400	1	x	7	6.0	2012
	2	x	7	6.3	2517
	3	x	7	8.0	2517
	4	x	10	10.1	2517
	5	x	10	11.7	3020
	6*	x	10	14.5	3020
	8*	x	10	18.2	3030
450	1	x	7	6.1	2517
	2	x	7	8.2	2517
	3	x	7	9.8	2517
	4	x	10	11.8	3020
	5	x	10	13.9	3020
	6*	x	10	16.9	3030
	8*	x	10	24.0	3535
500	2	x	7	9.1	2517
	3	x	7	11.4	2517
	4	x	10	14.3	3020
	5	x	10	17.6	3020
	6*	x	10	19.9	3020
630	3	x	7	15.9	2517
	4	x	10	20.0	3020
	5	x	10	22.7	3020
	6*	x	7	33.6	3535

Number of grooves z	1	2	3	4	5	6	8
Face width b_2 [mm]	16	28	40	52	64	76	100

Taper bush	1610	2012	2517	3020	3030	3535
Bore d_2 [mm] from … to …	14-42	14-50	16-60	25-75	35-75	35-90

● Solid pulley
O Plate pulley (with or without holes)
X Spoked pulley
Material: EN-GJL-200 (GG 20)
DIN EN 1561

* Non stock items

Bore diameter d_2 see page 72

 © ARNTZ OPTIBELT GROUP, GERMANY

STANDARD RANGE

optibelt KS V-GROOVED PULLEYS FOR TAPER BUSHES – GROOVE ACCORDING TO DIN 2211

Profile SPA/A/13

Datum diameter d_d [mm]	Number of grooves	Design		Weight without bushes [≈ kg]	Taper bush
63◆	1	●	11	0.6	1108
	2	●	11	0.8	1108
67◆	1	●	8	0.3	1108
	2	●	6	0.5	1108
71▲◆■	1	●	8	0.3	1108
	2	●	6	0.5	1108
	3	●	6	0.7	1108
75▲◆■	1	●	8	0.4	1108
	2	●	6	0.6	1108
	3	●	6	0.8	1108
80▲◆■	1	●	8	0.5	1210
	2	●	6	0.6	1210
	3	●	6	0.9	1210
85▲◆■	1	●	8	0.6	1210
	2	●	6	0.7	1210
	3	●	6	1.0	1210
90	1	●	8	0.7	1210
	2	●	6	0.7	1610
	3	●	6	1.0	1610
	4	●	6	1.2	1615
95	1	●	8	0.8	1210
	2	●	6	0.9	1610
	3	●	6	1.1	1610
	4	●	6	1.4	1615
100	1	●	8	0.8	1610
	2	●	6	0.9	1610
	3	●	2	1.2	1610
	4	●	2	1.7	1610
	5	●	6	1.9	1610
106	1	●	8	0.9	1610
	2	●	6	1.1	1610
	3	●	2	1.4	1610
	4	●	6	2.0	2012
	5	●	6	2.0	2012
112	1	●	8	1.0	1610
	2	●	6	1.2	1610
	3	●	6	1.3	2012
	4	●	6	1.9	2012
	5	●	6	2.1	2012
118	1	●	8	1.2	1610
	2	●	6	1.4	1610
	3	●	2	1.8	2012
	4	●	2	2.0	2012
	5	●	2	2.4	2012
125	1	●	8	1.4	1610
	2	●	2	1.7	1610
	3	●	2	2.0	2012
	4	●	2	2.5	2012
	5	●	2	2.7	2012
132	1	●	8	1.6	1610
	2	●	2	1.8	2012
	3	●	2	2.3	2012
	4	●	2	2.6	2517
	5	●	2	2.9	2517
140	1	●	8	1.8	1610
	2	●	2	2.0	2012
	3	●	2	2.8	2517
	4	●	2	3.1	2517
	5	●	2	3.4	2517
150	1	●	8	1.4	1610
	2	●	2	2.4	2012
	3	●	2	3.5	2517
	4	●	2	3.8	2517
	5	●	2	4.2	2517
160	1	○	5	1.9	1610
	2	●	2	2.9	2012
	3	●	2	3.9	2517
	4	●	2	4.4	2517
	5	●	2	5.1	2517
170	1	○	5	2.0	1610
	2	●	2	3.1	2012
	3	●	2	4.6	2517
	4	●	2	5.5	2517
	5	●	2	5.9	3020
180	1	○	5	2.1	1610
	2	○	9	3.4	2012
	3	●	2	5.1	2517
	4	●	2	5.9	2517
	5	●	2	6.2	3020
190	1	○	5	2.3	1610
	2	○	9	3.8	2012
	3	●	2	5.4	2517
	4	●	2	6.8	2517
	5	●	2	7.4	3020

▲ for profile 13 ◆ for profile AX/X13 ■ for profile XPA

Number of grooves z	1	2	3	4	5
Face width b_2 [mm]	20	35	50	65	80

Taper bush	1108	1210	1610	1615	2012	2517	3020
Bore d_2 [mm] from … to …	10-28	11-32	14-42	14-42	14-50	16-60	25-75

● Solid pulley
○ Plate pulley (with or without holes)
× Spoked pulley
Material: EN-GJL-200 (GG 20)
DIN EN 1561

Bore diameter d_2 see page 72

STANDARD RANGE

optibelt KS V-GROOVED PULLEYS FOR TAPER BUSHES – GROOVE ACCORDING TO DIN 2211

Profile SPA/A/13

Datum diameter d_d [mm]	Number of grooves	Design		Weight without bushes [≈ kg]	Taper bush	Datum diameter d_d [mm]	Number of grooves	Design		Weight without bushes [≈ kg]	Taper bush
200	1	O	5	2.6	2012	450	1	x	7	7.0	2012
	2	O	5	4.1	2517		2	x	7	10.3	2517
	3	O	9	4.9	2517		3	x	7	14.1	3020
	4	●	2	7.4	3020		4	x	10	15.5	3020
	5	●	4	8.4	3020		5	x	7	24.3	3535
212	1	O	5	2.7	2012	500	1	x	7	8.0	2517
	2	O	5	4.3	2517		2	x	7	11.6	2517
	3	O	9	5.2	2517		3	x	7	16.0	3020
	4	●	2	7.3	3020		4	x	10	18.2	3020
	5	●	2	8.2	3020		5	x	7	27.3	3535
224	1	x	7	2.7	2012	560	1	x	7	11.6	2517
	2	O	5	4.4	2517		2	x	7	15.5	3020
	3	O	9	5.5	2517		3	x	7	17.8	3020
	4	●	2	7.4	3020		4	x	7	26.7	3535
	5	●	2	8.3	3020		5	x	7	30.4	3535
236	1	x	7	2.8	2012	630	1	x	7	10.1	2517
	2	O	5	4.6	2517		2	x	7	16.0	3020
	3	O	9	5.7	2517		3	x	7	22.0	3020
	4	●	2	7.8	3020		4	x	7	30.8	3535
	5	●	2	8.7	3020		5	x	7	33.7	3535
250	1	x	7	2.9	2012						
	2	x	7	4.8	2517						
	3	O	9	5.9	2517						
	4	O	9	8.0	3020						
	5	O	9	9.0	3020						
280	1	x	7	3.3	2012						
	2	x	7	5.4	2517						
	3	O	9	6.7	2517						
	4	O	9	8.8	3020						
	5	O	5	15.5	3535						
315	1	x	7	3.6	2012						
	2	x	7	6.0	2517						
	3	O	5	8.3	3020						
	4	O	9	9.7	3020						
	5	O	5	17.0	3535						
355	1	x	7	4.2	2012						
	2	x	7	6.7	2517						
	3	x	7	9.2	3020						
	4	x	10	11.0	3020						
	5	x	7	18.6	3535						
400	1	x	7	4.9	2012						
	2	x	7	8.1	2517						
	3	x	7	11.0	3020						
	4	x	10	12.8	3020						
	5	x	7	21.0	3535						

Number of grooves z	1	2	3	4	5
Face width b_2 [mm]	20	35	50	65	80

Taper bush	2012	2517	3020	3535
Bore d_2 [mm] from … to …	14-50	16-60	25-75	35-90

● Solid pulley
O Plate pulley (with or without holes)
X Spoked pulley
Material: EN-GJL-200 (GG 20)
DIN EN 1561

Bore diameter d_2 see page 72

 © ARNTZ OPTIBELT GROUP, GERMANY

STANDARD RANGE

optibelt KS V-GROOVED PULLEYS FOR TAPER BUSHES – GROOVE ACCORDING TO DIN 2211

Profile SPB/B/17

Datum diameter d_d [mm]	Number of grooves	Design		Weight without bushes [≈ kg]	Taper bush
100◆	1	●	1	0.9	1610
	2	●	6	1.2	1610
	3	●	6	1.7	1610
112▲◆■	1	●	1	1.1	1610
	2	●	6	1.5	1610
	3	●	6	2.0	1610
118▲◆■	1	●	1	1.3	1610
	2	●	6	1.7	1610
	3	●	6	2.3	1610
125▲◆■	1	●	1	1.5	1610
	2	●	2	1.9	2012
	3	●	2	2.4	2012
	4	●	4	3.0	2012
	5	●	6	3.5	2012
132▲	1	●	1	1.8	1610
	2	●	2	2.2	2012
	3	●	2	2.8	2012
	4	●	4	3.4	2012
	5	●	4	3.7	2012
140	1	●	1	2.3	1610
	2	●	2	2.7	2012
	3	●	2	3.3	2012
	4	●	2	3.7	2517
	5	●	2	4.5	2517
	6	●	4	4.6	2517
150	1	●	1	2.7	1610
	2	●	2	3.1	2012
	3	●	2	3.9	2517
	4	●	2	4.4	2517
	5	●	4	5.2	2517
	6	●	4	5.6	2517
160	1	●	1	2.5	1610
	2	●	2	2.9	2012
	3	●	2	4.2	2517
	4	●	4	4.9	2517
	5	●	4	6.0	2517
	6	●	4	5.4	3020
170	1	●	1	2.9	1610
	2	●	2	3.3	2012
	3	●	2	4.9	2517
	4	●	4	5.7	2517
	5	●	4	6.1	3020
	6	●	4	6.5	3020
	8	●	4	8.0	3020
180	1	●	1	4.1	1610
	2	●	8	4.5	2517
	3	●	2	5.5	2517
	4	●	4	6.9	2517
	5	●	4	7.1	3020
	6	●	4	7.7	3020
	8	●	4	9.5	3020
190	1	●	8	4.6	2012
	2	●	8	5.0	2517
	3	●	2	6.3	2517
	4	●	4	7.6	2517
	5	●	4	8.1	3020
	6	●	4	9.2	3020
	8	●	4	11.2	3030
200	1	●	8	5.0	2012
	2	●	8	5.4	2517
	3	●	2	6.5	2517
	4	●	2	8.8	3020
	5	●	2	9.1	3020
	6	●	4	10.3	3020
	8	●	4	13.5	3535
212	1	●	8	4.2	2012
	2	●	8	4.9	2517
	3	●	2	6.0	2517
	4	●	2	9.8	3020
	5	●	2	11.0	3020
	6	●	4	14.3	3535
	8	●	4	16.6	3535
224	1	●	8	4.7	2012
	2	●	8	5.3	2517
	3	●	2	6.3	2517
	4	●	2	11.3	3020
	5	●	2	12.7	3020
	6	●	4	17.0	3535
	8	●	4	19.3	3535
	10	●	4	21.8	3535
236	1	●	8	5.0	2012
	2	●	8	5.5	2517
	3	×	10	7.0	2517
	4	×	10	14.5	3020
	5	●	6	16.9	3535
	6	●	4	20.0	3535
	8	●	4	22.3	3535
	10	●	4	25.3	3535

▲ for profile 17 ◆ for profile BX/X17 ■ for profile XPB

Number of grooves z	1	2	3	4	5	6	8	10
Face width b_2 [mm]	25	44	63	82	101	120	158	196

Taper bush	1610	2012	2517	3020	3030	3535
Bore d_2 [mm] from … to …	14-42	14-50	16-60	25-75	35-75	35-90

● Solid pulley
○ Plate pulley (with or without holes)
× Spoked pulley
Material: EN-GJL-200 (GG 20)
DIN EN 1561

Bore diameter d_2 see page 72

STANDARD RANGE

optibelt KS V-GROOVED PULLEYS FOR TAPER BUSHES – GROOVE ACCORDING TO DIN 2211

Profile SPB/B/17

Datum diameter d_d [mm]	Number of grooves	Design		Weight without bushes [≈ kg]	Taper bush
250	1	●	8	5.4	2012
	2	x	7	5.5	2517
	3	●	2	7.7	3020
	4	●	2	19.6	3020
	5	●	2	21.7	3535
	6	●	4	23.3	3535
	8	●	4	27.5	3535
	10	●	4	29.3	3535
265	2	●	7	6.2	2517
	3	O	9	8.0	3020
	4	O	9	9.5	3020
	6	O	9	16.7	3525
	8	O	9	24.0	3525
280	1	x	7	6.1	2012
	2	x	7	6.8	2517
	3	x	10	8.6	3020
	4	O	9	10.1	3020
	5	O	9	17.8	3535
	6	O	9	19.6	3535
	8	O	9	26.7	3535
	10	O	9	30.5	3535
300	2	x	7	7.3	2517
	3	x	10	9.2	3020
	4	O	9	14.3	3020
	5	O	9	18.2	3535
	6	O	9	21.9	3535
	8	O	9	26.2	3535
315	1	x	7	7.2	2012
	2	x	7	7.8	2517
	3	x	10	9.6	3020
	4	O	5	17.1	3535
	5	O	9	18.8	3535
	6	O	9	23.0	3535
	8	O	9	26.0	3535
	10	O	9	31.5	3535
335	2	x	7	7.8	2517
	3	x	10	10.5	3020
	4	x	7	18.3	3535
	5	x	10	19.5	3535
	6	x	10	22.0	3535
	8	x	10	28.2	3535
	10*	x	10	36.0	4040
355	2	x	7	8.7	3020
	3	x	10	10.8	3020
	4	x	7	18.6	3535
	5	x	10	20.8	3535
	6	O	9	22.8	3535
	8	x	10	27.0	3535
	10*	x	10	38.0	4040
375	2	x	7	9.5	3020
	3	x	10	11.5	3020
	4	x	10	16.5	3525
	6	x	10	25.0	3535
	8	x	10	28.0	4040
400	2	x	7	10.0	3020
	3	x	7	18.3	3535
	4	x	7	20.5	3535
	5	x	10	23.4	3535
	6	x	10	25.1	3535
	8	x	10	36.5	4040
	10*	x	10	41.0	4040
425	2	x	7	11.5	3020
	3	x	7	18.0	3535
	4	x	10	19.5	3535
	6	x	10	25.1	4040
	8	x	10	52.5	4545
450	2	x	7	12.1	3020
	3	x	7	21.9	3535
	4	x	7	24.5	3535
	5	x	10	27.3	3535
	6	x	10	35.5	4040
	8	x	10	40.9	4040
	10*	x	10	53.5	4545
500	2	x	7	13.2	3020
	3	x	7	23.1	3535
	4	x	7	26.6	3535
	5	x	10	29.9	3535
	6	x	10	38.9	4040
	8	x	10	45.5	4040
	10*	x	10	61.0	4545
560	2	x	7	16.5	3030
	3	x	7	25.9	3535
	4	x	7	29.0	3535
	5	x	7	35.3	4040
	6	x	10	43.1	4040
	8	x	10	49.0	4545
	10*	x	10	55.7	4545

Number of grooves z	1	2	3	4	5	6	8	10
Face width b_2 [mm]	25	44	63	82	101	120	158	196

Taper bush	2012	2517	3020	3030	3535	4040	4545
Bore d_2 [mm] from ... to ...	14-50	16-60	25-75	35-75	35-90	40-100	55-110

● Solid pulley
O Plate pulley (with or without holes)
X Spoked pulley
Material: EN-GJL-200 (GG 20)
DIN EN 1561

* Non stock items

Bore diameter d_2 see page 72

 © ARNTZ OPTIBELT GROUP, GERMANY

STANDARD RANGE

optibelt KS V-GROOVED PULLEYS FOR TAPER BUSHES – GROOVE ACCORDING TO DIN 2211

Profile SPB/B/17											
Datum diameter d_d [mm]	Number of grooves	Design		Weight without bushes [≈ kg]	Taper bush	Datum diameter d_d [mm]	Number of grooves	Design		Weight without bushes [≈ kg]	Taper bush
630	2	x	7	18.5	3020						
	3	x	7	28.9	3535						
	4	x	7	33.3	3535						
	5	x	7	43.1	4040						
	6	x	10	49.2	4040						
	8	x	10	62.0	4545						
	10*	x	10	72.0	4545						
710	3	x	7	33.2	3535						
	4	x	7	39.1	3535						
	5	x	7	50.2	4040						
	6	x	10	62.3	4545						
	8	x	10	71.0	4545						
	10*	x	10	80.0	4545						
800	3	x	7	36.7	3535						
	4	x	7	48.8	4040						
	5	x	7	56.1	4040						
	6	x	10	71.4	4545						
	8	x	10	90.9	4545						
	10*	x	10	102.0	4545						
900	3	x	7	46.8	3535						
	4	x	7	60.0	4040						
	5	x	7	74.8	4545						
	6	x	10	81.5	4545						
	8	x	10	110.0	4545						
	10*	x	10	126.0	5050						
1000	3	x	7	56.5	4040						
	4	x	7	66.5	4040						
	5	x	7	80.5	4545						
	6	x	10	90.0	4545						
	8	x	10	132.0	5050						
	10*	x	10	147.0	5050						

Number of grooves z	2	3	4	5	6	8	10
Face width b_2 [mm]	44	63	82	101	120	158	196

Taper bush	3020	3030	3535	4040	4545	5050
Bore d_2 [mm] from … to …	25-75	35-75	35-90	40-100	55-110	70-125

● Solid pulley
○ Plate pulley (with or without holes)
× Spoked pulley
Material: EN-GJL-200 (GG 20)
DIN EN 1561

* Non stock items

Bore diameter d_2 see page 72

STANDARD RANGE

optibelt KS V-GROOVED PULLEYS FOR TAPER BUSHES – GROOVE ACCORDING TO DIN 2211

Profile SPC/C/22

Datum diameter d_d [mm]	Number of grooves	Design		Weight without bushes [≈ kg]	Taper bush
200▲◆■	3	●	4	9.0	2517
	4	●	4	10.5	3020
	5	●	4	14.0	3535
	6	●	4	17.0	3535
212▲◆■	3	●	4	10.0	3020
	4	●	4	12.5	3020
	5	●	4	15.0	3535
	6	●	4	18.0	3535
224	2	●	4	8.1	3020
	3	●	4	11.0	3020
	4	●	4	14.0	3535
	5	●	4	16.2	3535
	6	●	4	19.0	3535
	8	●	4	24.9	3535
236	3	●	4	12.0	3020
	4	●	4	17.2	3535
	5	●	4	19.1	3535
	6	●	4	20.8	3535
	8	●	4	25.5	3535
250	2	●	4	9.8	3020
	3	●	4	14.5	3020
	4	●	4	20.7	3535
	5	●	4	22.8	3535
	6	●	4	26.0	3535
	8	●	4	29.7	3535
	10*	●	4	34.0	4040
265	3	●	8	21.2	3535
	4	○	9	24.0	3535
	5	○	9	26.2	3535
	6	○	9	29.0	3535
	8	○	9	33.3	3535
280	3	●	8	24.0	3535
	4	○	9	29.0	3535
	5	○	9	31.0	3535
	6	○	9	33.8	3535
	8	○	9	37.5	3535
	10*	○	9	45.0	4040
300	3	○	5	21.0	3535
	4	○	9	25.0	3535
	5	○	9	28.5	3535
	6	○	9	29.0	3535
	8	●	4	46.5	4040
	10*	○	9	53.5	4545
315	3	○	5	21.6	3535
	4	○	9	24.6	3535
	5	○	9	29.0	3535
	6	○	9	31.4	3535
	8	●	4	50.0	4040
	10*	○	9	58.0	4545
335	3	○	5	22.5	3535
	4	○	9	26.5	3535
	5	○	9	30.0	3535
	6	○	9	35.0	3535
	8	○	9	58.0	4040
355	3	○	5	22.9	3535
	4	○	9	28.3	3535
	5	○	9	32.5	3535
	6	○	9	36.0	3535
	8	○	9	67.5	4040
	10*	○	9	121.0	4545
375	3	○	5	23.8	3535
	4	○	9	30.0	3535
	5	○	9	33.0	3535
	6	○	9	45.5	4040
	8	○	9	68.0	4545
400	3	x	7	24.1	3535
	4	x	10	28.0	3535
	5	x	10	34.0	3535
	6	○	9	48.0	4040
	8	○	9	65.0	4545
	10*	○	9	88.0	5050
425	3	x	7	26.0	3535
	4	x	10	31.0	3535
	5	○	9	45.0	4040
	6	○	9	58.0	4545
	8	○	9	74.0	4545
450	3	x	7	28.6	3535
	4	x	10	33.5	3535
	5	x	10	45.0	4040
	6	○	9	61.1	4545
	8	○	9	78.7	5050
	10*	○	9	101.0	5050
475	3	x	7	40.0	3535
	4	x	10	47.0	3535
	5	x	10	47.2	4040
	6	○	9	62.8	4545
	8	○	9	81.5	5050

▲ for profile 22 ◆ for profile CX/X22 ■ for profile XPC

Number of grooves z	3	4	5	6	8	10
Face width b_2 [mm]	85	110.5	136	161.5	212.5	263.5
Taper bush	2517	3020	3535	4040	4545	5050
Bore d_2 [mm] from … to …	16-60	25-75	35-90	40-100	55-110	70-125

● Solid pulley
○ Plate pulley (with or without holes)
× Spoked pulley
Material: EN-GJL-200 (GG 20)
DIN EN 1561

* Non stock items

Bore diameter d_2 see page 72

 © ARNTZ OPTIBELT GROUP, GERMANY

STANDARD RANGE

optibelt KS V-GROOVED PULLEYS FOR TAPER BUSHES – GROOVE ACCORDING TO DIN 2211

Profile SPC/C/22											
Datum diameter d_d [mm]	Number of grooves	Design		Weight without bushes [≈ kg]	Taper bush	Datum diameter d_d [mm]	Number of grooves	Design		Weight without bushes [≈ kg]	Taper bush
500	3	x	7	30.9	3535						
	4	x	10	39.0	3535						
	5	x	10	48.7	4040						
	6	x	10	60.2	4545						
	8	O	9	87.4	5050						
	10*	O	9	127.0	5050						
560	3	x	7	36.0	3535						
	4	x	10	50.0	4040						
	5	x	10	63.0	4545						
	6	x	10	77.0	5050						
	8	x	10	94.0	5050						
	10*	O	9	115.0	5050						
630	3	x	7	48.5	4040						
	4	x	7	61.0	4545						
	5	x	10	77.0	5050						
	6	x	10	86.0	5050						
	8	x	10	105.5	5050						
	10*	O	9	130.0	5050						
710	3	x	7	–	4040						
	4	x	7	–	4545						
	5	x	10	–	5050						
	6	x	10	–	5050						
	8	x	10	–	5050						
	10*	O	9	–	5050						
800	3	x	7	–	4545						
	4	x	7	–	5050						
	5	x	10	–	5050						
	6	x	10	–	5050						
	8	x	10	–	5050						
	10*	O	9	–	5050						
1000	5	x	10	–	5050						
	6	x	10	–	5050						
	8	x	10	–	5050						
	10*	O	9	–	5050						
1250	5	x	10	–	5050						
	6	x	10	–	5050						
	8	x	10	–	5050						
	10*	O	9	–	5050						

Number of grooves z	3	4	5	6	8	10
Face width b_2 [mm]	85	110.5	136	161.5	212.5	263.5

Taper bush	3535	4040	4545	5050
Bore d_2 [mm] from … to …	35-90	40-100	55-110	70-125

● Solid pulley
O Plate pulley (with or without holes)
X Spoked pulley
Material: EN-GJL-200 (GG 20)
DIN EN 1561

* Non stock items

Bore diameter d_2 see page 72

STANDARD RANGE

optibelt KS V-GROOVED PULLEYS FOR CYLINDRICAL BORES – GROOVE ACCORDING TO DIN 2211

Profile SPZ/Z/10											
Datum diameter d_d [mm]	Number of grooves	Design	Weight [≈ kg]	Finished bore d_{max} [mm]	Hub length l [mm]	Datum diameter d_d [mm]	Number of grooves	Design	Weight [≈ kg]	Finished bore d_{max} [mm]	Hub length l [mm]
45▲◆	1	O	0.23	16	24	132	1	O	0.81	30	24
	2	O	0.30	16	35		2	O	1.30	38	35
	3	O	0.40	16	35		3	O	1.62	40	40
50▲◆	1	O	0.30	20	24	140	1	O	0.92	28	24
	2	O	0.40	20	35		2	O	1.40	38	38
	3	O	0.50	20	40		3	O	1.69	38	40
56▲◆■	1	O	0.32	20	24	150	1	x	1.05	28	24
	2	O	0.45	25	35		2	O	1.50	38	38
	3	O	0.65	25	40		3	O	1.85	38	40
63	1	O	0.34	25	24	160	1	x	1.22	32	30
	2	O	0.60	25	35		2	x	1.60	38	38
	3	O	0.85	25	40		3	x	2.40	42	40
71	1	O	0.34	25	24	170	1	x	1.66	40	30
	2	O	0.62	25	35		2	x	1.85	40	38
	3	O	1.00	30	40		3	x	3.00	42	40
75	1	O	0.35	24	24	180	1	x	2.10	32	30
	2	O	0.64	24	35		2	x	3.05	38	38
	3	O	1.05	28	40		3	x	3.50	42	40
80	1	O	0.35	25	24	190	1	x	2.25	35	30
	2	O	0.65	30	35		2	x	2.35	35	38
	3	O	1.10	38	35		3	x	4.00	35	40
85	1	O	0.30	25	24	200	1	x	2.40	32	38
	2	O	0.70	30	35		2	x	2.85	38	38
	3	O	1.10	38	35		3	x	4.45	42	40
90	1	O	0.38	25	24	212	1	x	2.60	35	30
	2	O	0.75	30	35		2	x	3.40	35	38
	3	O	1.15	38	38		3	x	5.00	38	40
95	1	O	0.40	28	24	225	1	x	2.80	32	38
	2	O	0.83	28	35		2	x	4.00	38	38
	3	O	1.20	38	38		3	x	5.30	42	40
100	1	O	0.48	28	24	250	1	x	3.30	32	38
	2	O	0.90	30	35		2	x	4.80	38	38
	3	O	1.25	38	38		3	x	6.00	42	40
106	1	O	0.50	30	24	280	1	x	3.85	35	34
	2	O	0.96	28	35		2	x	5.20	42	38
	3	O	1.32	38	38		3	x	7.00	48	40
112	1	O	0.54	28	24	315	1	x	4.35	35	34
	2	O	1.00	30	35		2	x	6.80	42	38
	3	O	1.40	38	38		3	x	8.25	48	40
118	1	O	0.60	28	24	355	1	x	4.60	35	34
	2	O	1.10	38	35		2	x	8.00	42	40
	3	O	1.47	38	38		3	x	10.00	48	45
125	1	O	0.70	28	24						
	2	O	1.20	30	35						
	3	O	1.55	38	40						

▲ for profile Z/10 ◆ for profile ZX/X10 ■ for profile XPZ

Number of grooves z	1	2	3
Face width b_2 [mm]	16	28	40

● Solid pulley
O Plate pulley (with or without holes)
X Spoked pulley
Hub position: flush one-sided
Material: EN-GJL-200 (GG 20) – DIN EN 1561

 © ARNTZ OPTIBELT GROUP, GERMANY

STANDARD RANGE

optibelt KS V-GROOVED PULLEYS FOR CYLINDRICAL BORES – GROOVE ACCORDING TO DIN 2211

Profile SPA/A/13

Datum diameter d_d [mm]	Number of grooves	Design	Weight [≈ kg]	Finished bore d_{max} [mm]	Hub length l [mm]
50	1	O	0.34	18	34
	2	O	0.48	18	49
	3	O	0.55	18	47
56	1	O	0.42	20	34
	2	O	0.62	20	49
	3	O	0.74	20	47
63◆	1	O	0.52	25	34
	2	O	0.77	25	49
	3	O	0.85	25	47
	4▽	O	1.23	25	60
	5▽	O	1.48	25	70
71▲◆■	1	O	0.50	25	34
	2	O	0.89	28	49
	3	O	0.96	32	42
	4▽	O	1.47	32	60
	5▽	O	1.83	32	70
75▲◆■	1	O	0.53	24	34
	2	O	1.02	24	49
	3	O	1.08	24	42
	4▽	O	1.76	24	60
	5▽	O	1.92	28	82
80▲◆■	1	O	0.56	28	34
	2	O	1.04	32	49
	3	O	1.19	38	42
	4▽	O	1.89	38	60
	5▽	O	2.00	38	55
85▲◆■	1	O	0.64	24	34
	2	O	1.20	28	49
	3	O	1.40	28	42
	4▽	O	1.98	28	53
	5▽	O	2.20	32	55
90	1	O	0.88	28	34
	2	O	1.47	32	49
	3	O	1.62	38	42
	4▽	O	2.22	42	53
	5▽	O	2.51	42	67
95	1	O	0.76	28	34
	2	O	1.57	28	49
	3	O	1.89	28	42
	4▽	O	2.47	32	53
	5▽	O	2.75	35	67
100	1	O	0.84	28	34
	2	O	1.36	32	49
	3	O	1.98	38	52
	4▽	O	2.72	42	53
	5▽	O	3.10	42	60
106	1	O	0.88	28	34
	2	O	1.65	28	49
	3	O	2.20	32	42
	4▽	O	3.24	32	53
	5▽	O	3.85	35	60
112	1	O	1.09	28	34
	2	O	1.75	38	49
	3	O	2.38	38	42
	4▽	O	3.37	42	53
	5▽	O	3.95	42	60
118	1	O	1.10	32	34
	2	O	1.80	38	49
	3	O	2.42	42	42
	4▽	O	3.42	42	53
	5▽	O	4.10	48	65
125	1	O	1.38	32	34
	2	O	1.90	38	49
	3	O	2.55	42	42
	4▽	O	3.49	42	53
	5▽	O	4.40	48	65
132	1	O	1.45	32	34
	2	O	2.20	38	49
	3	O	2.58	42	42
	4▽	O	3.58	42	53
	5▽	O	4.75	48	65
140	1	O	1.52	32	34
	2	O	2.33	38	49
	3	O	2.63	42	42
	4▽	O	3.65	42	53
	5▽	O	4.95	48	65
150	1	x	1.60	38	36
	2	x	2.59	38	49
	3	O	2.95	42	42
	4▽	O	4.04	42	53
	5▽	O	5.15	48	65
160	1	x	1.75	38	36
	2	x	2.40	38	49
	3	x	2.80	42	42
	4▽	O	3.62	48	60
	5▽	O	5.45	48	70
170	1	x	2.00	35	36
	2	x	2.90	35	49
	3	x	3.20	35	42
	4▽	x	4.20	35	60
	5▽	x	5.80	38	70

▲ for profile A/13 ◆ for profile AX/X13 ■ for profile XPA

▽ d_d + 4 mm

Number of grooves z	1	2	3	4	5
Face width b_2 [mm]	20	35	50	67	82

● Solid pulley
O Plate pulley (with or without holes)
X Spoked pulley
Hub position: flush one-sided
Material: EN-GJL-200 (GG 20) – DIN EN 1561

STANDARD RANGE

optibelt KS V-GROOVED PULLEYS FOR CYLINDRICAL BORES – GROOVE ACCORDING TO DIN 2211

Profile SPA/A/13

Datum diameter d_d [mm]	Number of grooves	Design	Weight [≈ kg]	Finished bore d_{max} [mm]	Hub length l [mm]
180	1	x	2.02	38	36
	2	x	3.15	42	49
	3	x	3.60	42	42
	4▽	x	4.65	48	60
	5▽	x	6.13	48	70
190	1	x	2.02	38	36
	2	x	3.20	42	49
	3	x	4.00	42	42
	4▽	x	5.24	48	60
	5▽	x	6.31	48	70
200	1	x	2.40	38	36
	2	x	2.85	42	49
	3	x	4.21	48	42
	4▽	x	4.95	55	60
	5▽	x	6.45	60	70
212	1	x	2.70	40	36
	2	x	3.40	42	49
	3	x	4.40	42	42
	4▽	x	5.68	42	60
	5▽	x	6.85	42	70
225	1	x	2.75	40	36
	2	x	3.87	42	49
	3	x	4.60	42	42
	4▽	x	6.50	42	60
	5▽	x	7.25	42	70
236	1	x	3.30	38	36
	2	x	4.10	42	49
	3	x	4.90	48	42
	4▽	x	6.20	55	60
	5▽	x	7.50	55	70
250	1	x	3.40	42	36
	2	x	4.32	48	49
	3	x	5.30	48	42
	4▽	x	7.00	55	60
	5▽	x	7.85	60	70
280	1	x	3.90	42	44
	2	x	5.35	48	53
	3	x	6.50	48	47
	4▽	x	8.52	55	60
	5▽	x	9.90	60	70
300	1	x	4.25	48	44
	2	x	5.90	48	53
	3	x	7.50	55	47
	4▽	x	9.82	55	60
	5▽	x	11.30	60	70

▽ **d_d + 4 mm**

Datum diameter d_d [mm]	Number of grooves	Design	Weight [≈ kg]	Finished bore d_{max} [mm]	Hub length l [mm]
315	1	x	4.78	48	44
	2	x	6.60	48	53
	3	x	8.75	55	47
	4▽	x	11.80	55	60
	5▽	x	12.50	60	70
355	1	x	5.50	48	44
	2	x	7.70	55	53
	3	x	9.55	55	47
	4▽	x	11.80	55	60
	5▽	x	12.85	60	70
400	1▽	x	6.85	50	50
	2▽	x	8.80	55	53
	3▽	x	10.95	60	47
	4▽	x	12.40	60	67
	5▽	x	15.90	60	82
450	1▽	x	7.50	55	50
	2▽	x	9.40	55	53
	3▽	x	12.15	60	47
	4▽	x	14.20	65	67
	5▽	x	18.30	65	82
500	1▽	x	10.50	55	50
	2▽	x	10.70	55	55
	3▽	x	13.45	60	60
	4▽	x	16.25	65	67
	5▽	x	22.80	65	82
560	1▽	x	14.00	55	60
	2▽	x	13.10	55	60
	3▽	x	15.60	60	74
	4▽	x	19.40	65	67
	5▽	x	24.50	65	82

▽ **d_d + 4 mm**

Number of grooves z	1	2	3	4	5
Face width b_2 [mm]	20	35	50	67	82

● Solid pulley
○ Plate pulley (with or without holes)
× Spoked pulley
Hub position: flush one-sided
Material: EN-GJL-200 (GG 20) – DIN EN 1561

 © ARNTZ OPTIBELT GROUP, GERMANY

STANDARD RANGE

optibelt KS V-GROOVED PULLEYS FOR CYLINDRICAL BORES – GROOVE ACCORDING TO DIN 2211

Profile SPB/B/17

Datum diameter d_d [mm]	Number of grooves	Design	Weight [≈ kg]	Finished bore d_{max} [mm]	Hub length l [mm]
56	1	O	0.61	20	41
	2	O	1.00	20	60
	3	O	1.00	22	62
63	1	O	0.76	20	41
	2	O	1.20	20	60
	3	O	1.20	22	62
71	1	O	0.79	22	41
	2	O	1.31	22	60
	3	O	1.60	22	55
75	1	O	0.82	25	41
	2	O	1.42	25	60
	3	O	1.85	25	62
80	1	O	1.03	28	41
	2	O	1.65	28	60
	3	O	2.05	28	70
	5▽	O	2.73	28	80
85	1	O	1.10	30	41
	2	O	1.70	30	60
	3	O	2.15	30	55
	4▽	O	2.70	30	70
	5▽	O	3.00	30	75
90◆	1	O	1.17	32	41
	2	O	1.80	38	60
	3	O	2.30	38	55
	4▽	O	3.05	38	70
	5▽	O	3.30	38	75
95◆	1	O	1.25	35	41
	2	O	2.00	38	60
	3	O	2.50	38	67
	4▽	O	2.90	38	70
	5▽	O	3.60	38	75
100◆	1	O	1.32	32	41
	2	O	2.11	38	60
	3	O	2.85	38	55
	4▽	O	3.81	38	70
	5▽	O	4.45	38	75
	6▽	O	5.20	38	124
106◆	1	O	1.45	28	41
	2	O	2.00	28	60
	3	O	3.00	30	55
	4▽	O	4.30	30	70
	5▽	O	5.10	32	75
	6▽	O	6.00	32	124
112▲◆■	1	O	1.53	32	41
	2	O	2.35	38	60
	3	O	3.10	38	55
	4▽	O	4.75	42	67
	5▽	O	5.61	42	75
	6▽	O	6.15	42	85
118▲◆■	1	O	1.57	32	41
	2	O	2.43	38	60
	3	O	3.20	42	55
	4▽	O	6.20	42	70
	5▽	O	7.20	42	75
	6▽	O	6.60	42	85
125▲◆■	1	O	1.66	32	41
	2	O	2.55	38	60
	3	O	3.28	42	55
	4▽	O	4.74	42	70
	5▽	O	8.60	42	75
	6▽	O	8.00	48	85
132▲◆■	1	O	1.88	30	41
	2	O	2.63	30	60
	3	O	3.49	42	55
	4▽	O	6.30	42	70
	5▽	O	9.40	42	75
	6▽	O	8.50	42	85
140	1	O	2.10	32	41
	2	O	2.90	38	60
	3	O	3.90	42	55
	4▽	O	6.92	42	70
	5▽	O	7.58	48	75
	6▽	O	11.40	48	85
150	1	O	2.43	32	43
	2	O	3.24	38	48
	3	O	4.28	42	60
	4▽	O	6.76	42	70
	5▽	O	8.43	48	75
	6▽	O	12.10	48	85
160	1	x	2.50	38	43
	2	x	3.32	42	48
	3	x	4.60	48	60
	4▽	O	7.01	48	70
	5▽	O	9.35	48	75
	6▽	O	12.85	55	85
170	1	x	2.85	42	43
	2	x	3.44	42	48
	3	x	4.89	42	60
	4▽	O	7.20	48	70
	5▽	O	8.90	48	75
	6▽	O	13.10	48	85

▲ for profile B/17 ◆ for profile BX/X17 ■ for profile XPB

▽ d_d + 5.5 mm

Number of grooves z	1	2	3	4	5	6
Face width b_2 [mm]	25	44	63	86	105	124

● Solid pulley
O Plate pulley (with or without holes)
X Spoked pulley
Hub position: flush one-sided
Material: EN-GJL-200 (GG 20) – DIN EN 1561

STANDARD RANGE

optibelt KS V-GROOVED PULLEYS FOR CYLINDRICAL BORES – GROOVE ACCORDING TO DIN 2211

Profile SPB/B/17

Datum diameter d_d [mm]	Number of grooves	Design	Weight [≈ kg]	Finished bore d_{max} [mm]	Hub length l [mm]
180	1	x	3.10	38	43
	2	x	3.90	42	48
	3	x	5.28	48	60
	4▽	x	7.42	48	70
	5▽	O	9.05	55	75
	6▽	O	10.80	60	85
190	1	x	3.19	42	43
	2	x	4.22	42	48
	3	x	5.49	42	60
	4▽	x	7.69	48	70
	5▽	O	9.22	50	75
	6▽	O	11.95	55	85
200	1	x	3.40	38	43
	2	x	4.45	42	48
	3	x	5.85	48	60
	4▽	x	7.98	50	60
	5▽	O	9.50	55	80
	6▽	O	12.20	60	90
212	1	x	3.75	42	43
	2	x	4.66	42	48
	3	x	6.15	48	60
	4▽	x	7.70	50	70
	5▽	x	10.30	50	80
	6▽	O	13.51	55	90
224	1	x	4.00	42	43
	2	x	5.40	42	48
	3	x	6.90	48	60
	4▽	x	8.64	55	70
	5▽	O	11.72	50	90
	6▽	O	14.75	55	90
250	1	x	4.20	42	43
	2	x	6.10	48	55
	3	x	8.60	55	60
	4▽	x	9.70	60	70
	5▽	x	13.20	65	80
	6▽	x	17.00	65	90
280	1	x	5.70	48	49
	2	x	7.04	48	55
	3	x	9.67	55	60
	4▽	x	11.52	60	70
	5▽	x	15.50	65	80
	6▽	x	18.00	65	90
300	1	x	5.90	48	49
	2	x	7.50	48	55
	3	x	10.50	55	67
	4▽	x	12.40	60	80
	5▽	x	15.40	65	80
	6▽	x	18.25	70	90
315	1	x	6.40	48	49
	2	x	8.22	55	55
	3	x	12.90	55	67
	4▽	x	13.00	60	80
	5▽	x	17.60	65	80
	6▽	x	20.60	75	90
355	1	x	7.00	48	49
	2	x	9.70	55	55
	3	x	13.40	55	67
	4▽	x	18.25	60	80
	5▽	x	18.75	65	75
	6▽	x	19.75	75	90
400	1▽	x	8.46	50	49
	2▽	x	10.00	55	55
	3▽	x	14.30	60	67
	4▽	x	18.50	65	80
	5▽	x	22.50	70	85
	6▽	x	28.00	75	90
450	1▽	x	9.86	50	55
	2▽	x	10.87	55	55
	3▽	x	15.05	60	67
	4▽	x	20.50	65	80
	5▽	x	26.00	70	80
	6▽	x	28.90	75	90
500	1▽	x	10.70	50	55
	2▽	x	13.70	60	59
	3▽	x	15.20	65	67
	4▽	x	21.30	70	80
	5▽	x	30.00	75	80
	6▽	x	33.80	80	90
560	2▽	x	15.00	60	55
	3▽	x	24.20	65	67
	4▽	x	26.20	70	80
	5▽	x	34.40	75	80
	6▽	x	39.00	80	90
630	2▽	x	20.20	60	80
	3▽	x	27.00	65	80
	4▽	x	30.80	75	86
	5▽	x	37.20	80	90
	6▽	x	44.00	90	100

▽ **d_d + 5.5 mm**

Number of grooves z	1	2	3	4	5	6
Face width b_2 [mm]	25	44	63	86	105	124

● Solid pulley
O Plate pulley (with or without holes)
X Spoked pulley
Hub position: flush one-sided
Material: EN-GJL-200 (GG 20) – DIN EN 1561

 © ARNTZ OPTIBELT GROUP, GERMANY

STANDARD RANGE

optibelt KS V-GROOVED PULLEYS FOR CYLINDRICAL BORES – GROOVE ACCORDING TO DIN 2211

Profile SPC/C/22

Datum diameter d_d [mm]	Number of grooves	Design	Weight [≈ kg]	Finished bore d_{max} [mm]	Hub length l [mm]
180▲◆■	1	O	4.20	40	54
	2	O	7.20	50	64
	3	O	10.40	55	90
	4	O	10.50	55	95
	5	O	18.00	60	100
	6	O	23.70	65	115
200▲◆■	1	O	4.80	40	54
	2	O	7.80	50	64
	3	O	10.60	55	90
	4	O	11.20	60	95
	5	O	15.40	65	100
	6	O	27.00	70	125
225	1	x	5.50	48	54
	2	x	7.80	52	64
	3	x	10.60	52	90
	4	x	13.10	55	95
	5	x	16.70	60	100
	6	x	35.00	60	115
250	1	x	7.30	52	54
	2	x	8.80	52	64
	3	x	11.10	65	90
	4	x	15.30	70	95
	5	x	19.00	75	100
	6	x	23.70	60	115
280	1	x	8.70	52	54
	2	x	10.90	55	64
	3	x	15.60	70	90
	4	x	17.50	75	95
	5	x	20.50	75	100
315	1	x	9.10	52	54
	2	x	13.00	55	74
	3	x	17.10	70	90
	4	x	20.00	75	95
	5	x	24.70	80	100
	6	x	31.20	85	115
335	2	x	14.00	55	74
	3	x	18.30	55	90
	4	x	22.40	60	95
	5	x	28.30	65	100
	6	x	34.40	75	115
355	2	x	15.20	60	74
	3	x	19.20	70	90
	4	x	25.80	70	95
	5	x	32.00	75	100
	6	x	36.20	75	115
400	3	x	20.60	70	90
	4	x	28.00	70	105
	5	x	32.00	75	100
450	2	x	21.10	70	80
	3	x	26.30	75	90
	4	x	31.10	75	105
	5	x	42.20	80	110
	6	x	48.50	80	120
500	3	x	28.40	75	90
	4	x	34.10	75	105
	5	x	48.20	80	110
	6	x	52.50	80	120
560	3	x	31.10	75	90
	4	x	39.00	75	105
	5	x	54.10	85	110
	6	x	61.50	85	120
630	3	x	38.50	80	90
	4	x	48.10	80	105
	5	x	62.20	85	110
	6	x	73.20	85	120

▲ for profile C/22 ◆ for profile CX/X22 ■ for profile XPC

Number of grooves z	1	2	3	4	5	6
Face width b_2 [mm]	38	64	90	116	142	168

● Solid pulley
O Plate pulley (with or without holes)
X Spoked pulley
Hub position: flush one-sided
Material: EN-GJL-200 (GG 20) – DIN EN 1561

STANDARD RANGE
optibelt TB TAPER BUSHES

Taper bushes with metrical bore, groove according to DIN 6885 Part 1

Taper bush — Material: EN-GJL-200 – DIN EN 1561

	1008	1108	1210	1215	1310	1610	1615	2012	2517	3020	3030	3525	3535	4040	4545	5050
Bore diameter d_2 **[mm]**	10 11 12 14 16 18 19 20 22 24▲ 25▲	10 11 12 14 16 18 19 20 22 24 25 28▲	11 12 14 16 18 19 20 22 24 25 28 30 32	11 12 14 16 18 19 20 22 24 25 28 30 32	14 16 18 19 20 22 24 25 28 30 32 35	14 16 18 19 20 22 24 25 28 30 32 35 38 40 42▲	14 16 18 19 20 22 24 25 28 30 32 35 38 40 42▲	14 16 18 19 20 22 24 25 28 30 32 35 38 40 42 45 48 50	16 18 19 20 22 24 25 28 30 32 35 38 40 42 45 48 50 55 60	25 28 30 32 35 38 40 42 45 48 50 55 60 65 70 75	35 38 40 42 45 48 50 55 60 65 70 75	35 38 40 42 45 48 50 55 60 65 70 75 80 85 90	35 38 40 42 45 48 50 55 60 65 70 75 80 85 90	40 42 45 48 50 55 60 65 70 75 80 85 90 95 100	55 60 65 70 75 80 85 90 95 100 105 110	70 75 80 85 90 95 100 105 110 115 120 125
Hexagonal socket screw [inch]	$\frac{1}{4}$ x $\frac{1}{2}$	$\frac{1}{4}$ x $\frac{1}{2}$	$\frac{3}{8}$ x $\frac{5}{8}$	$\frac{3}{8}$ x $\frac{5}{8}$	$\frac{3}{8}$ x $\frac{5}{8}$	$\frac{3}{8}$ x $\frac{5}{8}$	$\frac{3}{8}$ x $\frac{5}{8}$	$\frac{7}{16}$ x $\frac{7}{8}$	$\frac{1}{2}$ x 1	$\frac{5}{8}$ x $1\frac{1}{4}$	$\frac{5}{8}$ x $1\frac{1}{4}$	$\frac{1}{2}$ x $1\frac{1}{2}$	$\frac{1}{2}$ x $1\frac{1}{2}$	$\frac{5}{8}$ x $1\frac{3}{4}$	$\frac{3}{4}$ x 2	$\frac{7}{8}$ x $2\frac{1}{4}$
Tightening torque [Nm]	5.7	5.7	20	20	20	20	20	31	49	92	92	115	115	172	195	275
Bush length [mm]	22.3	22.3	25.4	38.1	25.4	25.4	38.1	31.8	44.5	50.8	76.2	63.5	88.9	101.6	114.3	127.0
Weight for $d_{2\,min}$ [≈ kg]	0.12	0.16	0.28	0.39	0.32	0.41	0.60	0.75	1.06	2.50	3.75	3.90	5.13	7.68	12.70	15.17

From 3525: Cylinder head screw with hexagonal socket ▲ This is a shallow keyway bore.

Shallow keyways for taper bushes

Bore diameter d_2 [mm]	Groove width b [mm]	Groove depth t_2 [mm]	Bore diameter d_2 [mm]	Groove width b [mm]	Groove depth t_2 [mm]
24	8	2.0	28	8	2.0
25	8	1.3	42	12	2.2

Taper bushes with imperial bores, groove according to British Standard BS 46 Part 1

Taper bush — Material: EN-GJL-200 – DIN EN 1561

	1008	1108	1210	1215	1310	1610	1615	2012	2517	3020	3030	3525	3535	4040	4545	5050
Bore diameter d_2 **[inch]**	$\frac{3}{8}$* $\frac{1}{2}$ $\frac{5}{8}$ $\frac{3}{4}$ $\frac{7}{8}$ 1▲	$\frac{3}{8}$* $\frac{1}{2}$ $\frac{5}{8}$ $\frac{3}{4}$ $\frac{7}{8}$ 1 $1\frac{1}{8}$▲*	$\frac{1}{2}$ $\frac{5}{8}$ $\frac{3}{4}$ $\frac{7}{8}$ 1 $1\frac{1}{8}$ $1\frac{1}{4}$	$\frac{5}{8}$* $\frac{3}{4}$ $\frac{7}{8}$ 1 $1\frac{1}{8}$ $1\frac{1}{4}$	$\frac{1}{2}$* $\frac{5}{8}$* $\frac{3}{4}$* $\frac{7}{8}$* 1* $1\frac{1}{8}$ $1\frac{1}{4}$ $1\frac{3}{8}$	$\frac{1}{2}$ $\frac{5}{8}$ $\frac{3}{4}$ $\frac{7}{8}$ 1 $1\frac{1}{8}$ $1\frac{1}{4}$ $1\frac{3}{8}$ $1\frac{1}{2}$ $1\frac{5}{8}$	$\frac{1}{2}$ $\frac{5}{8}$ $\frac{3}{4}$ $\frac{7}{8}$* 1 $1\frac{1}{8}$ $1\frac{1}{4}$ $1\frac{3}{8}$ $1\frac{1}{2}$ $1\frac{5}{8}$▲*	$\frac{5}{8}$* $\frac{3}{4}$ $\frac{7}{8}$ 1 $1\frac{1}{8}$ $1\frac{1}{4}$ $1\frac{3}{8}$ $1\frac{1}{2}$ $1\frac{5}{8}$ $1\frac{3}{4}$ $1\frac{7}{8}$ 2	$\frac{3}{4}$ $\frac{7}{8}$ 1 $1\frac{1}{8}$ $1\frac{1}{4}$ $1\frac{3}{8}$ $1\frac{1}{2}$ $1\frac{5}{8}$ $1\frac{3}{4}$ $1\frac{7}{8}$ 2 $2\frac{1}{8}$ $2\frac{1}{4}$ $2\frac{3}{8}$ $2\frac{1}{2}$	$1\frac{1}{4}$ $1\frac{3}{8}$ $1\frac{1}{2}$ $1\frac{5}{8}$ $1\frac{3}{4}$* $1\frac{7}{8}$ 2 $2\frac{1}{8}$* $2\frac{1}{4}$ $2\frac{3}{8}$ $2\frac{1}{2}$ $2\frac{5}{8}$ $2\frac{3}{4}$ $2\frac{7}{8}$ 3	$1\frac{1}{4}$ $1\frac{3}{8}$ $1\frac{1}{2}$ $1\frac{5}{8}$ $1\frac{3}{4}$* $1\frac{7}{8}$ 2 $2\frac{1}{8}$* $2\frac{1}{4}$ $2\frac{3}{8}$ $2\frac{1}{2}$ $2\frac{5}{8}$* $2\frac{3}{4}$* $2\frac{7}{8}$ 3	$1\frac{1}{2}$ $1\frac{5}{8}$ $1\frac{3}{4}$ $1\frac{7}{8}$ 2 $2\frac{1}{8}$ $2\frac{1}{4}$ $2\frac{3}{8}$ $2\frac{1}{2}$ $2\frac{5}{8}$ $2\frac{3}{4}$ $2\frac{7}{8}$ 3 $3\frac{1}{8}$ $3\frac{1}{4}$ $3\frac{3}{8}$ $3\frac{1}{2}$▲	$1\frac{1}{2}$ $1\frac{5}{8}$ $1\frac{3}{4}$ $1\frac{7}{8}$ 2 $2\frac{3}{8}$ $2\frac{1}{2}$ $2\frac{5}{8}$ $2\frac{3}{4}$ $2\frac{7}{8}$ 3 $3\frac{1}{8}$ $3\frac{1}{4}$ $3\frac{3}{8}$ $3\frac{1}{2}$▲	$1\frac{3}{4}$* $1\frac{7}{8}$* 2* $2\frac{1}{8}$* $2\frac{1}{4}$* $2\frac{3}{8}$* $2\frac{1}{2}$* $2\frac{5}{8}$* $2\frac{3}{4}$* $2\frac{7}{8}$* 3* $3\frac{1}{8}$* $3\frac{1}{4}$* $3\frac{3}{8}$* $3\frac{1}{2}$* $3\frac{3}{4}$▲* 4▲*	$2\frac{1}{4}$* $2\frac{3}{8}$* $2\frac{1}{2}$* $2\frac{3}{4}$* $2\frac{7}{8}$* 3* $3\frac{1}{4}$* $3\frac{3}{8}$* $3\frac{1}{2}$* $3\frac{3}{4}$* 4* $4\frac{1}{4}$▲* $4\frac{1}{2}$▲*	3* $3\frac{1}{4}$* $3\frac{1}{2}$* $3\frac{3}{4}$* 4* $4\frac{1}{4}$* $4\frac{1}{2}$* $4\frac{3}{4}$* 5▲*
Hexagonal socket screw [inch]	$\frac{1}{4}$ x $\frac{1}{2}$	$\frac{1}{4}$ x $\frac{1}{2}$	$\frac{3}{8}$ x $\frac{5}{8}$	$\frac{3}{8}$ x $\frac{5}{8}$	$\frac{3}{8}$ x $\frac{5}{8}$	$\frac{3}{8}$ x $\frac{5}{8}$	$\frac{3}{8}$ x $\frac{5}{8}$	$\frac{7}{16}$ x $\frac{7}{8}$	$\frac{1}{2}$ x 1	$\frac{5}{8}$ x $1\frac{1}{4}$	$\frac{5}{8}$ x $1\frac{1}{4}$	$\frac{1}{2}$ x $1\frac{1}{2}$	$\frac{1}{2}$ x $1\frac{1}{2}$	$\frac{5}{8}$ x $1\frac{3}{4}$	$\frac{3}{4}$ x 2	$\frac{7}{8}$ x $2\frac{1}{4}$
Tightening torque [Nm]	5.7	5.7	20	20	20	20	20	31	49	92	92	115	115	172	195	275
Bush length [mm]	22.3	22.3	25.4	38.1	25.4	25.4	38.1	31.8	44.5	50.8	76.2	63.5	88.9	101.6	114.3	127.0
Weight for $d_{2\,min}$ [≈ kg]	0.12	0.16	0.28	0.39	0.32	0.41	0.60	0.75	1.06	2.50	3.75	3.90	5.13	7.68	12.70	15.17

From 3525: Cylinder head screw with hexagonal socket * Non stock items ▲ This is a shallow keyway bore.

 © ARNTZ OPTIBELT GROUP, GERMANY

DRIVE CALCULATION
EXPLANATION OF SYMBOLS

a	=	drive centre distance provisional	[mm]
a_{nom}	=	drive centre distance calculated with a standard belt length	[mm]
b_d	=	datum width	
b_1	=	top width	
c_1	=	arc of contact correction factor	
c_2	=	service factor	
c_3	=	belt length factor	
c_4	=	number of idlers factor	
d_{dg}	=	datum diameter of large pulley (DIN 2211 Sheet 1, Table 2)	[mm]
d_{dk}	=	datum diameter of small pulley (DIN 2211 Sheet 1, Table 2)	[mm]
d_{d1}	=	datum diameter of the driver pulley	[mm]
d_{d2}	=	datum diameter of the driven pulley	[mm]
E	=	belt deflection per 100 mm span length	[mm]
E_a	=	belt deflection for a given span length	[mm]
f	=	load used to set belt tension	[N]
f_B	=	flex rate	[s^{-1}]
i	=	drive ratio	
k	=	constant for calculating centrifugal force in belt set	
L	=	span length	[mm]
L_{iSt}	=	standard inside belt length	[mm]
L_{ith}	=	calculated inside belt length	[mm]
L_{dSt}	=	standard belt datum length	[mm]
L_{dth}	=	calculated belt datum length	[mm]
n_g	=	speed of the larger pulley	[min^{-1}]
n_k	=	speed of the smaller pulley	[min^{-1}]
n_1	=	speed of the driver pulley	[min^{-1}]
n_2	=	speed of the driven pulley	[min^{-1}]
P	=	motor or normal running power	[kW*]
P_B	=	design power	[kW*]
P_N	=	nominal power rating per belt	[kW*]
S_a	=	minimum static shaft loading	[N]
T	=	minimum static tension per belt	[N]
v	=	belt speed	[m/s]
x	=	minimum allowance above centre distance a_{nom} for belt stretch and wear	[mm]
y	=	minimum allowance below centre distance a_{nom} for easy belt fitting	[mm]
z	=	number of belts	
α	=	angle of belt drive = $90° - \frac{\beta}{2}$	[°]
β	=	arc of contact on small pulley	[°]

* 1 kW = 1 kNm/s

The terms pitch diameter (d_w), pitch length (L_w) and pitch circumference (U_w) used previously have been changed to datum diameter (d_d), datum length (L_d) and datum circumference (U_d) in order to bring them into line with current standard terminology.

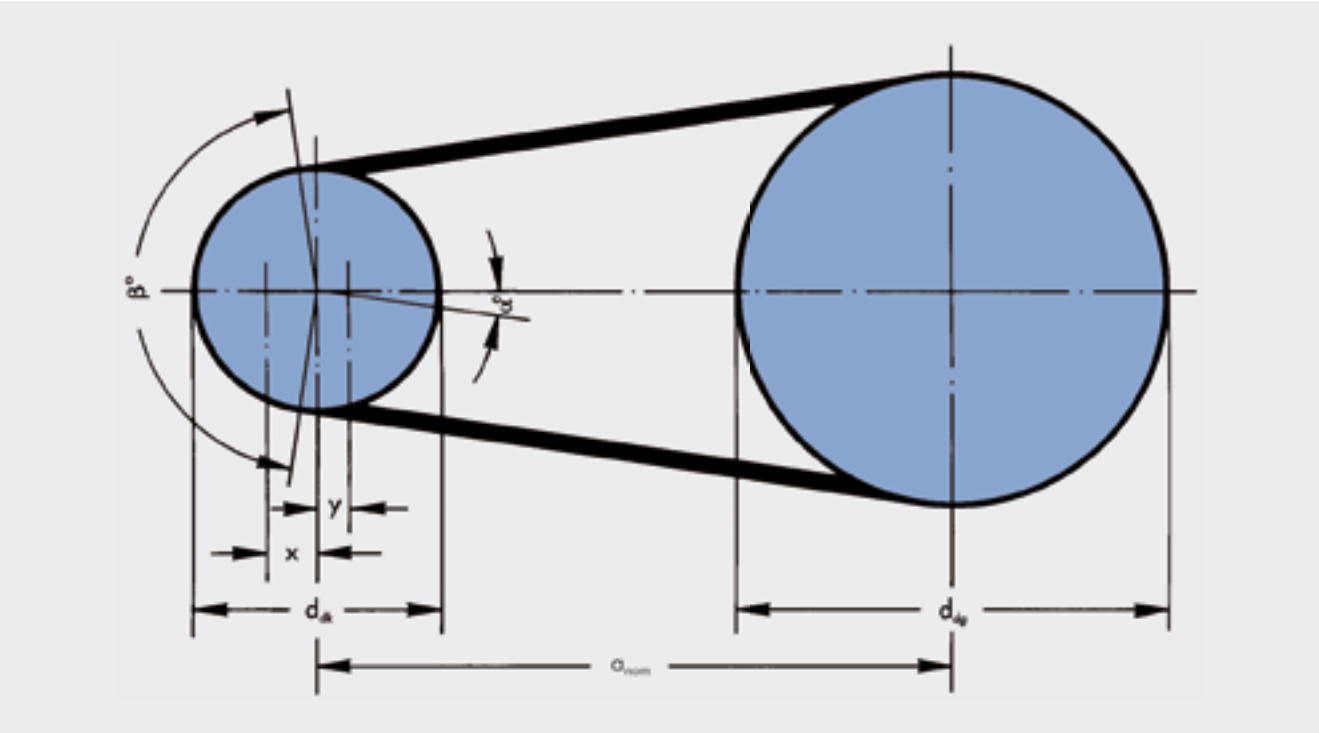

DRIVE CALCULATION

OPTIBELT NOMINAL POWER RATING P_N – ARC OF CONTACT CORRECTION FACTOR C_1

The Optibelt nominal power ratings P_N in tables 32 to 68 are based upon an internationally accepted basic formula and a theoretical belt life of 25,000 hours under ideal conditions. This formula contains material constants that take into account the quality of the raw materials used and make allowances for production methods. Due to the special qualities of Optibelt V-belts, other material constants than those given in DIN have been taken into account. As a result, the nominal Optibelt power ratings P_N significantly exceed the ratings given, for wedge belts according to DIN 7753 Part 2 and for classic V-belts according to DIN 2218, for the same theoretical belt life. The nominal power ratings P_N are based on the smallest loaded pulley in the drive system. The belt power rating value P_N is calculated taking into account

- the datum diameter of the smaller pulley d_{dk}
- the speed of the smaller pulley n_k
- the drive ratio i
- an assumed arc of contact at the smaller pulley of $\beta = 180°$
- a reference belt length for the specific belt profile

In order to account for the actual drive data, based on the arc of contact and the belt lengths employed, correction factors for the arc of contact c_1 and length c_3 have been introduced. If required, drive calculations can be provided for any theoretical belt life.
Intermediate values for nominal power rating, arc of contact and length correction factors can be found via linear interpolation.

The factor c_1 corrects the power rating P_N, when the arc of contact is smaller than 180°, as the P_N value is calculated on the arc of contact $\beta = 180°$ on the smaller pulley.

Table 22

$\frac{d_{dg} - d_{dk}}{a_{nom}}$	$\beta \approx$	c_1
0	180°	1.00
0.05	177°	1.00
0.10	174°	1.00
0.15	171°	1.00
0.20	168°	0.99
0.25	165°	0.99
0.30	162°	0.99
0.35	160°	0.99
0.40	156°	0.99
0.45	153°	0.98
0.50	150°	0.98
0.55	147°	0.98
0.60	144°	0.98
0.65	141°	0.97
0.70	139°	0.97
0.75	136°	0.97
0.80	133°	0.96
0.85	130°	0.96
0.90	126°	0.96
0.95	123°	0.95
1.00	119°	0.94
1.05	115°	0.94
1.10	112°	0.93
1.15	109°	0.93
1.20	106°	0.92
1.25	103°	0.91
1.30	100°	0.91
1.35	96°	0.90
1.40	92°	0.88
1.45	88°	0.87
1.50	84°	0.86
1.55	80°	0.84
1.60	77°	0.83

 © ARNTZ OPTIBELT GROUP, GERMANY

DRIVE CALCULATION
LOAD FACTOR c_2

The service factor c_2 takes account of the daily operating time and of the type of driver and driven machine. It applies exclusively to two-pulley drives. Other arrangements such as drives with tension and guide idlers have not been taken into consideration. Pages 137-139 provide the relevant basic design guidelines for drives with more than two pulleys. Adverse operating conditions (e.g. aggressive dust, particularly high ambient temperatures or the effects of various substances) **have not** been taken into account. As it is practically impossible to cover every conceivable combination of driver/driven machine/operating conditions in a summary that complies with the relevant standards, the service factors are **approximate values**.

In special cases, e.g. increased starting torque (direct on-line starting of fans), in drives with frequent starts and stops, in systems subject to exceptional shock loads, or when significant masses are to be accelerated or braked, the service factor must be increased.
Empirical value:
With a starting torque > 1.8 this figure is to be divided by 1.5 in order to calculate the minimum load factor c_2.
Example: Starting torque MA = 3.0; c_2 selected 2.0.
Please consult our Applications Engineering Department for the solution of special problems.

Table 23

Examples for work machines	Examples for drive machines: AC motors and three-phase induction machines with a normal starting torque (up to 1.8 times nominal torque), e. g. synchronous motors and single-phase motors with a starting-aid phase, three-phase squirrel cage motors with direct start, star-delta connection or slip ring starters; direct-current shunt-wound motors, combustion engines and turbines n > 600 rpm			AC motors and three-phase induction machines with high starting torque (over 1.8 times nominal torque), e. g. single-phase motors with high starting torque; direct-current series-wound motors with series connection and compound; combustion engines and turbines n < 600 rpm		
	Load factor c_2 for daily operating time (hours)			Load factor c_2 for daily operating time (hours)		
	up to 10	over 10 to 16	over 16	up to 10	over 10 to 16	over 16
Light drives Centrifugal pumps and compressors, belt conveyors (light weight materials), fans and pumps up to 7.5 kW	1.1	1.1	1.2	1.1	1.2	1.3
Medium drives Plate cutters, presses, chain and belt conveyors (heavy materials), vibrating screens, generators and exciters, bakery machinery, machine tools (lathes and grinders), laundry machines, printing machinery, fans and pumps over 7.5 kW	1.1	1.2	1.3	1.2	1.3	1.4
Heavy drives Crushing plants, piston compressors, heavy-duty conveyors, directional throw conveyors, push conveyors (screw, plate belts, bucket and shovel conveyors), lifts, briquette presses, textile machinery, paper machinery, piston pumps, excavator pumps, log frame saws, hammer mills	1.2	1.3	1.4	1.4	1.5	1.6
Very heavy drives Heavy-duty mills, stone crushers, calenders, mixers, winches, cranes, excavators, heavy-duty wood working machinery	1.3	1.4	1.5	1.5	1.6	1.8

DRIVE CALCULATION

LENGTH FACTOR c_3 FOR OPTIBELT WEDGE BELTS AND KRAFTBANDS

The length factor c_3 takes into account the flex rate of the belt based on the reference length for the particular belt profile.

This results in the following relationships:

belt length > reference length	$c_3 > 1.0$
belt length = reference length	$c_3 = 1.0$
belt length < reference length	$c_3 < 1.0$

Table 24

Profile SPZ, XPZ		Profile SPA, XPA		Profile SPB, XPB		Profile SPC, XPC	
Datum length [mm]	c_3	Datum length [mm]	c_3	Datum length [mm]	c_3	Datum length [mm]	c_3
630	**0.83**	800	**0.81**	1250	**0.83**	2000	**0.85**
670	**0.84**	850	**0.82**	1320	**0.84**	2120	**0.86**
710	**0.85**	900	**0.83**	1400	**0.85**	2240	**0.86**
750	**0.86**	950	**0.84**	1500	**0.86**	2360	**0.87**
800	**0.87**	1000	**0.85**	1600	**0.87**	2500	**0.88**
850	**0.88**	1060	**0.86**	1700	**0.88**	2650	**0.89**
900	**0 89**	1120	**0.86**	1800	**0.89**	2800	**0.90**
950	**0.90**	1180	**0.87**	1900	**0.90**	3000	**0.91**
1000	**0.91**	1250	**0.88**	2000	**0.91**	3150	**0.91**
1060	**0.92**	1320	**0.89**	2120	**0.92**	3350	**0.92**
1120	**0.93**	1400	**0.90**	2240	**0.93**	3550	**0.93**
1180	**0.94**	1500	**0.91**	2360	**0.93**	3750	**0.94**
1250	**0.95**	1600	**0.92**	2500	**0.94**	4000	**0.95**
1320	**0.96**	1700	**0.93**	2650	**0.95**	4250	**0 96**
1400	**0.98**	1800	**0.94**	2800	**0.96**	4500	**0.97**
1500	**0.99**	1900	**0.95**	3000	**0.97**	4750	**0.98**
1600	**1.00**	2000	**0.96**	3150	**0.98**	5000	**0.98**
1700	**1.01**	2120	**0.97**	3350	**0.99**	5300	**0.99**
1800	**1.02**	2240	**0.98**	**3550**	**1.00**	**5600**	**1.00**
1900	**1.03**	2360	**0.99**	3750	**1.01**	6000	**1.01**
2000	**1.04**	**2500**	**1.00**	4000	**1.02**	6300	**1.02**
2120	**1.05**	2650	**1.01**	4250	**1.03**	6700	**1.03**
2240	**1.06**	2800	**1.02**	4500	**1.04**	7100	**1.04**
2360	**1.07**	3000	**1.03**	4700	**1.04**	7500	**1.04**
2500	**1.08**	3150	**1.04**	5000	**1.05**	8000	**1.05**
2650	**1.09**	3350	**1.05**	5300	**1.06**	8500	**1.06**
2800	**1.10**	3550	**1.06**	5600	**1.07**	9000	**1.07**
3000	**1.11**	3750	**1.07**	6000	**1.08**	9500	**1.08**
3150	**1.12**	4000	**1.08**	6300	**1.09**	10000	**1.09**
3350	**1.13**	4250	**1.09**	6700	**1.10**	10600	**1.09**
3550	**1.15**	4500	**1.10**	7100	**1.11**	11200	**1.10**
3750	**1.16**	4750	**1.11**	7500	**1.12**	11800	**1.11**
4000	**1.17**	5000	**1.12**	8000	**1.13**	12500	**1.12**
4250	**1.18**	5300	**1.13**	8500	**1.14**	13200	**1.13**
4500	**1.19**	5600	**1.14**	9000	**1.15**	14000	**1.14**
		6000	**1.15**	9500	**1.16**	15000	**1.15**
				10000	**1.17**		

 © ARNTZ OPTIBELT GROUP, GERMANY

DRIVE CALCULATION

LENGTH FACTOR c_3 FOR OPTIBELT WEDGE BELTS AND KRAFTBANDS

Table 25

Profile 3V/9N, 3VX/9NX 3V/9J, 3VX/9JX			Profile 5V/15N, 5VX/15NX 5V/15J, 5VX/15JX			Profile 8V/25N 8V/25J		
Belt designation	Outside length [mm]	c_3	Belt designation	Outside length [mm]	c_3	Belt designation	Outside length [mm]	c_3
3V 265	673	**0.84**	5V 500	1270	**0.84**	8V 1000	2540	**0.87**
3V 280	711	**0.85**	5V 530	1346	**0.85**	8V 1060	2692	**0.87**
3V 300	762	**0.86**	5V 560	1422	**0.85**	8V 1120	2845	**0 88**
3V 315	800	**0.87**	5V 600	1524	**0.87**	8V 1180	2997	**0.89**
3V 335	851	**0.88**	5V 630	1600	**0.87**	8V 1250	3175	**0.90**
3V 355	902	**0.90**	5V 670	1702	**0.88**	8V 1320	3353	**0.91**
3V 375	952	**0.91**	5V 710	1803	**0.89**	8V 1400	3556	**0.92**
3V 400	1016	**0.92**	5V 750	1905	**0.90**	8V 1500	3810	**0.93**
3V 425	1079	**0.93**	5V 800	2032	**0.91**	8V 1600	4064	**0.93**
3V 450	1143	**0.94**	5V 850	2159	**0.92**	8V 1700	4318	**0.94**
3V 475	1206	**0.95**	5V 900	2286	**0.93**	8V 1800	4572	**0.95**
3V 500	1270	**0.96**	5V 950	2413	**0.94**	8V 1900	4826	**0.96**
3V 530	1346	**0.97**	5V 1000	2540	**0.95**	8V 2000	5080	**0.97**
3V 560	1422	**0.98**	5V 1060	2692	**0.96**	8V 2120	5385	**0.98**
3V 600	1524	**0.99**	5V 1120	2845	**0.96**	8V 2240	5690	**0.98**
3V 630	**1600**	**1.00**	5V 1180	2997	**0.97**	8V 2360	5994	**0.99**
3V 670	1702	**1.01**	5V 1250	3175	**0.98**	**8V 2500**	**6350**	**1.00**
3V 710	1803	**1.02**	5V 1320	3353	**0.99**	8V 2650	6731	**1.01**
3V 750	1905	**1.03**	**5V 1400**	**3556**	**1.00**	8V 2800	7112	**1.02**
3V 800	2032	**1.04**	5V 1500	3810	**1.01**	8V 3000	7620	**1.03**
3V 850	2159	**1.05**	5V 1600	4064	**1.02**	8V 3150	8001	**1.03**
3V 900	2286	**1.07**	5V 1700	4318	**1.03**	8V 3350	8509	**1.04**
3V 950	2413	**1.07**	5V 1800	4572	**1.04**	8V 3550	9017	**1.05**
3V 1000	2540	**1.08**	5V 1900	4826	**1.05**	8V 3750	9525	**1.06**
3V 1060	2692	**1.09**	5V 2000	5080	**1.06**	8V 4000	10160	**1.07**
3V 1120	2845	**1.11**	5V 2120	5385	**1.07**	8V 4250	10795	**1.08**
3V 1180	2997	**1.11**	5V 2240	5690	**1.07**	8V 4500	11430	**1.09**
3V 1250	3175	**1.13**	5V 2360	5994	**1.08**	8V 4750	12065	**1.09**
3V 1320	3353	**1.14**	5V 2500	6350	**1.09**	8V 5000	12700	**1.10**
3V 1400	3556	**1.15**	5V 2650	6731	**1.10**	8V 5300	13462	**1.11**
3V 1500	3810	**1.16**	5V 2800	7112	**1.11**	8V 5600	14224	**1.12**
3V 1600	4064	**1.17**	5V 3000	7620	**1.12**	8V 6000	15240	**1.13**
3V 1700	4318	**1.18**	5V 3150	8001	**1.13**	8V 6300	16002	**1.13**
3V 1800	4572	**1.19**	5V 3350	8509	**1.14**			
3V 1900	4826	**1.20**	5V 3550	9017	**1.15**			
3V 2000	5080	**1.21**	5V 3750	9525	**1.16**			
			5V 4000	10160	**1.17**			

DRIVE CALCULATION

LENGTH FACTOR c_3 FOR OPTIBELT WEDGE BELTS AND KRAFTBANDS

Table 26

Profile 5*		Profile Y/6*		Profile 8		Profile Z/10, ZX/X10		Profile A/13, AX/X13		Profile B/17, BX/X17		Profile 20	
Datum length [mm]	c_3	Datum length [mm]	c_3	Datum length [mm]	c_3	Datum length [mm]	c_3	Datum length [mm]	c_3	Datum length [mm]	c_3	Datum length [mm]	c_3
172	**0.87**	280	**0.97**	299*	**0.86**	422*	**0.86**	660	**0.80**	900	**0.81**	948	**0.75**
202	**0.91**	295	**0.99**	334*	**0.88**	447*	**0.87**	740	**0.82**	990	**0.83**	998	**0.76**
248	**0.95**	**315**	**1.00**	374*	**0.91**	472*	**0.88**	780	**0.83**	1040	**0.84**	1048	**0.77**
277	**0.97**	330	**1.01**	419*	**0.93**	497*	**0.89**	830	**0.85**	1100	**0.85**	1168	**0.79**
292	**0.99**	350	**1.02**	444*	**0.94**	522*	**0.90**	880	**0.86**	1140	**0.85**	1228	**0.80**
312	**1.00**	370	**1.04**	469*	**0.95**	552*	**0.92**	930	**0.87**	1220	**0.87**	1298	**0.81**
327	**1.01**	390	**1.05**	494*	**0.97**	582*	**0.93**	980	**0.88**	1290	**0.88**	1368	**0.82**
334	**1.01**	415	**1.06**	549*	**0.99**	622	**0.94**	1030	**0.89**	1360	**0.89**	1448	**0.83**
347	**1.02**	440	**1 07**	**579***	**1.00**	652	**0.95**	1090	**0.90**	1440	**0.90**	1548	**0.85**
364	**1.03**	465	**1.09**	594*	**1.01**	692	**0.96**	1150	**0.91**	1540	**0.92**	1648	**0.86**
387	**1.05**	490	**1.10**	619*	**1.01**	732	**0.98**	1210	**0.92**	1640	**0.93**	1848	**0.88**
418	**1.06**	515	**1.11**	649*	**1.02**	**822**	**1.00**	1280	**0.94**	1740	**0.94**	2048	**0.91**
437	**1.07**	555	**1.13**	689*	**1.04**	847	**1.01**	1350	**0.95**	1840	**0.95**	2168	**0.92**
487	**1.10**	615	**1.15**	729*	**1.05**	887	**1.02**	1430	**0.96**	1940	**0.97**	2298	**0.93**
512	**1.11**	725	**1.19**	769*	**1.06**	922	**1.02**	1530	**0.97**	2040	**0.98**	2408	**0.94**
524	**1.11**	765	**1.20**	819*	**1.08**	947	**1.03**	1630	**0.99**	2160	**0.99**	2548	**0.95**
542	**1.12**	865	**1.23**	869	**1.09**	997	**1.04**	**1730**	**1.00**	**2280**	**1.00**	2698	**0.96**
566	**1.13**			894	**1.10**	1022	**1.05**	1830	**1.01**	2400	**1.01**	2848	**0.98**
612	**1.15**			919	**1.10**	1082	**1.06**	1930	**1.02**	2590	**1.03**	3048	**0.99**
				969	**1.11**	1142	**1.07**	2030	**1.03**	2690	**1.04**	**3198**	**1.00**
				1019	**1.13**	1172	**1.08**	2150	**1.05**	2840	**1.05**	3398	**1.01**
				1139	**1.15**	1202	**1.08**	2270	**1.06**	3040	**1.06**	3598	**1.03**
				1269	**1.18**	1272	**1.10**	2390	**1.07**	3190	**1.07**	3798	**1.04**
				1339	**1.19**	1342	**1.11**	2530	**1.08**	3390	**1.09**	4048	**1.05**
				1419	**1.20**	1422	**1.12**	2680	**1.10**	3590	**1.10**	4298	**1.06**
				1519	**1.22**	1522	**1.14**	2830	**1.11**	3790	**1.11**	4548	**1.08**
						1622	**1.15**	3030	**1.12**	4040	**1.13**	4798	**1.09**
								3180	**1.14**	4290	**1.14**	5048	**1.10**
								3380	**1.15**	4540	**1.15**	5348	**1.11**
								3780	**1.17**	4790	**1.17**	5648	**1.13**
								4030	**1.19**	5040	**1.18**	6048	**1.14**
								4530	**1.22**	5340	**1.19**	6348	**1.15**
								5030	**1.24**	5640	**1.20**	7148	**1.18**
										6040	**1.22**	8048	**1.21**
										6340	**1.23**		

Profile C/22, CX/X22				Profile 25				Profile D/32				Profile E/40	
1458	**0.80**	5058	**1.06**	1311	**0.75**	4311	**0.99**	3225	**0.86**	10075	**1.10**	4830	**0.92**
1558	**0.81**	5358	**1.07**	1461	**0.77**	**4561**	**1.00**	3425	**0.87**	10675	**1.11**	5080	**0.93**
1658	**0.83**	5658	**1.09**	1561	**0.78**	4811	**1.01**	3625	**0.88**	11275	**1.13**	5380	**0.94**
1858	**0.85**	6058	**1.10**	1661	**0.79**	5061	**1.02**	3825	**0.89**	11875	**1.14**	5680	**0.95**
1958	**0.86**	6358	**1.11**	1761	**0.80**	5361	**1.04**	4075	**0.91**	12575	**1.15**	6080	**0.96**
2058	**0.87**	6758	**1.13**	1861	**0.81**	5661	**1.05**	4325	**0.92**	13275	**1.16**	6380	**0.97**
2178	**0.88**	7158	**1.14**	1961	**0.82**	6061	**1.06**	4575	**0.93**	14075	**1.18**	6780	**0.99**
2298	**0.89**	7558	**1.15**	2061	**0.83**	6361	**1.07**	4825	**0.94**	15075	**1.19**	**7180**	**1.00**
2418	**0.90**	8058	**1.17**	2181	**0.85**	6761	**1.09**	5075	**0.95**	16075	**1.21**	7580	**1.01**
2558	**0.92**	9058	**1.19**	2301	**0.86**	7161	**1.10**	5375	**0.96**			8080	**1.03**
2708	**0.93**	10058	**1.22**	2421	**0.87**	7561	**1.11**	5675	**0.98**			8580	**1.04**
2858	**0.94**			2561	**0.88**	8061	**1.13**	6075	**0.99**			9080	**1.05**
3058	**0.95**			2711	**0.89**	9061	**1.15**	**6375**	**1.00**			9580	**1.06**
3208	**0.96**			2861	**0.90**	10061	**1.18**	6775	**1.01**			10080	**1.07**
3608	**0.99**			3061	**0.92**	11261	**1.20**	7175	**1.03**			10680	**1.09**
3808	**1.00**			3211	**0.93**	12561	**1.23**	7575	**1.04**			11280	**1.10**
4058	**1.01**			3411	**0.94**			8075	**1.05**			11880	**1.11**
4308	**1.03**			3611	**0.95**			8575	**1.06**			12580	**1.12**
4558	**1.04**			3811	**0.96**			9075	**1.08**			13280	**1.14**
4808	**1.05**			4061	**0.98**			9575	**1.09**			14080	**1.15**
												15080	**1.17**
												16080	**1.18**

***Raw edge, cogged V-belts**

 © ARNTZ OPTIBELT GROUP, GERMANY

DRIVE CALCULATION

GUIDELINES FOR SELECTING THE SUITABLE PROFILES FOR V-BELTS AND KRAFTBANDS

By using the following diagrams, the most suitable belt profiles as far as efficiency and size are concerned, can be selected for a specific application. The most efficient power transmission and economy is achieved by selecting as large a pulley diameter as possible for the profile in question. The limits to be observed are the maximum allowed circumferential speed, namely for

high performance wedge belts v_{max} = 55 m/s*;
for classic V-belts v_{max} = 30 m/s.

If the circumferential speed is outside this recommendation, please contact our Application Engineering Department.

Experience has shown that minimum pulley diameters should be avoided. These drives require a larger number of belts with wider pulleys and are therefore more expensive.

In borderline cases we recommend using the next smaller profile belt for the same pulley diameter, as the smaller profile will often save both cost and space. A further recommended solution is the use of the raw edge optibelt SUPER X-POWER M=S V-belts.

Furthermore, we recommend evaluating if the intersection point in the selection diagram is in the limit values of two profiles.

Comparing space requirement and costs, the high performance wedge belt is usually far superior to classic V-belts in almost all industrial drives. For this reason, new constructions use high performance wedge belts almost exclusively. Only in special cases, for replacement parts, or for V-flat drives or special cases where the application of classic V-belts is obligatory.

Diagram 1: optibelt VB classic V-belts DIN 2215

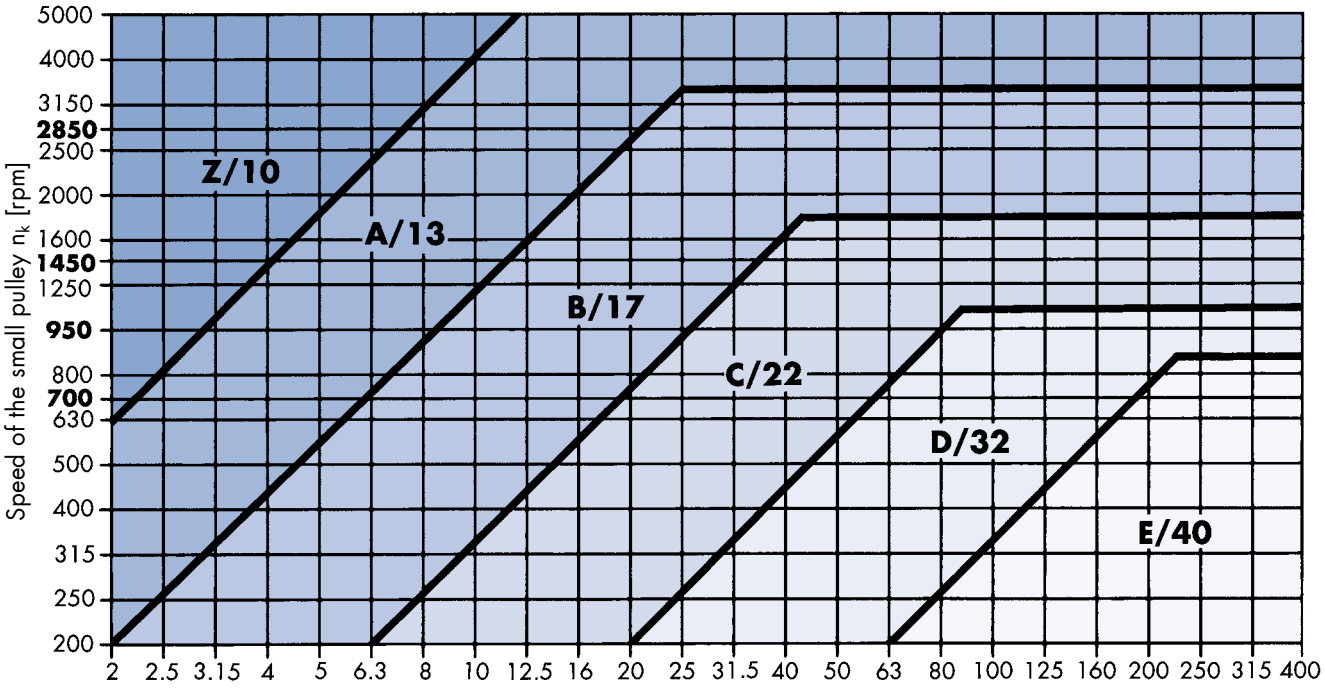

Design power $P_B = P \cdot c_2$ [kW]

* v > 42 m/sec. Please consult our Application Engineering Department.

DRIVE CALCULATION

GUIDELINES FOR SELECTING THE SUITABLE PROFILES FOR V-BELTS AND KRAFTBANDS

Diagram 2: optibelt SK high performance wedge belts DIN 7753 Part 1

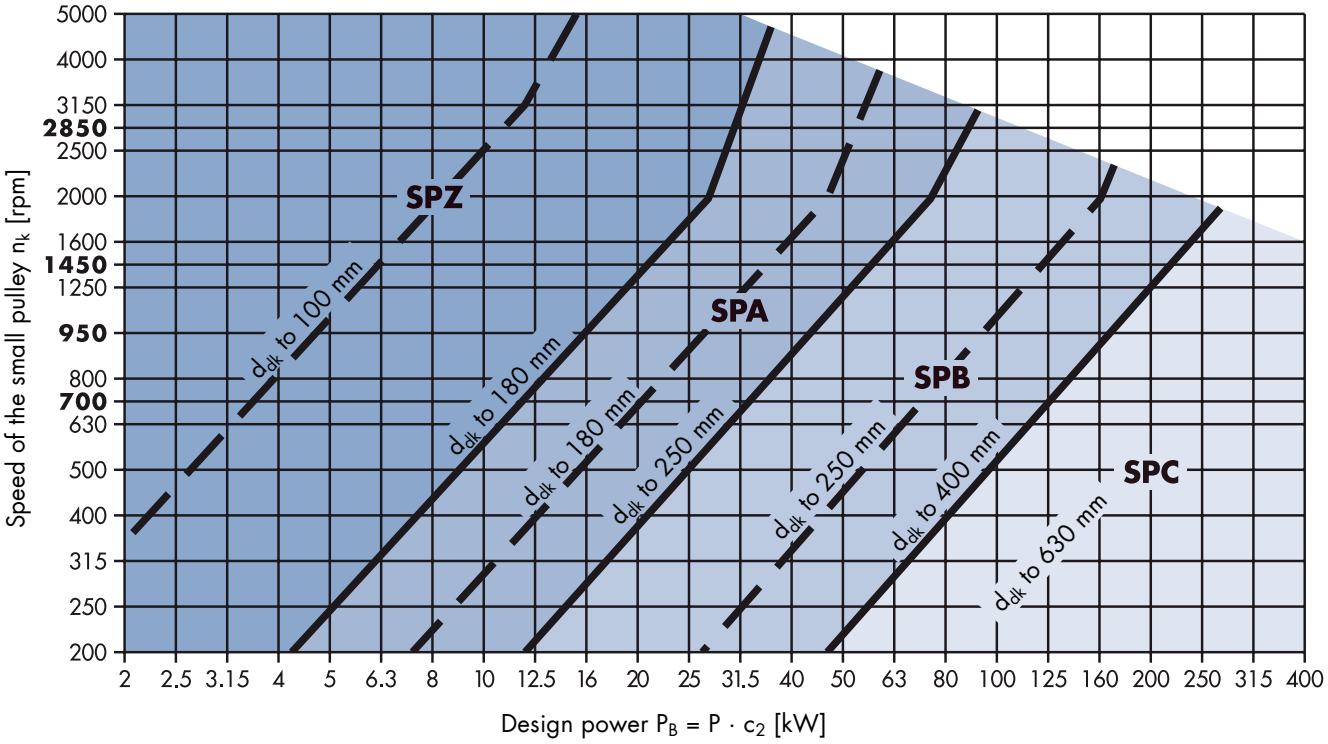

Diagram 3: optibelt SK high performance wedge belts ARPM/MPTA

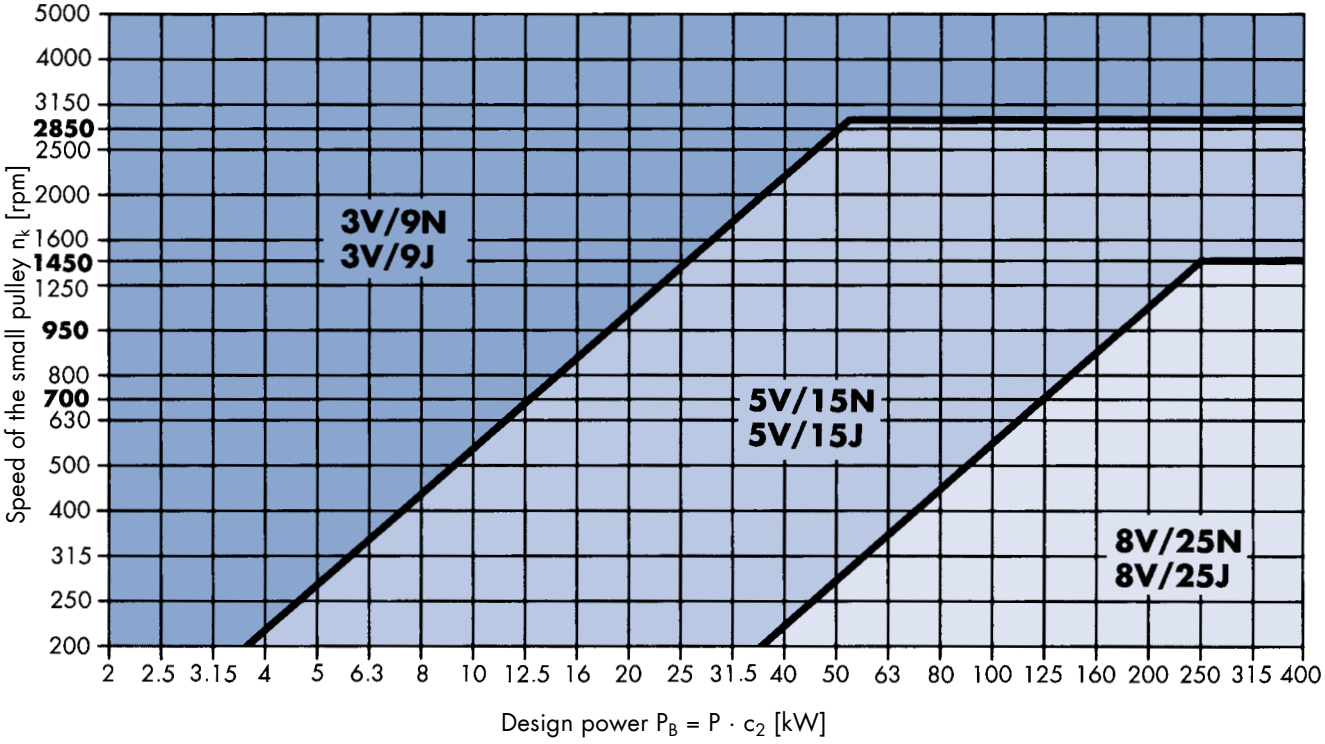

 © ARNTZ OPTIBELT GROUP, GERMANY

DRIVE CALCULATION

GUIDELINES FOR SELECTING THE SUITABLE PROFILES FOR V-BELTS AND KRAFTBANDS

Diagram 4: optibelt SUPER X-POWER M=S wedge belts

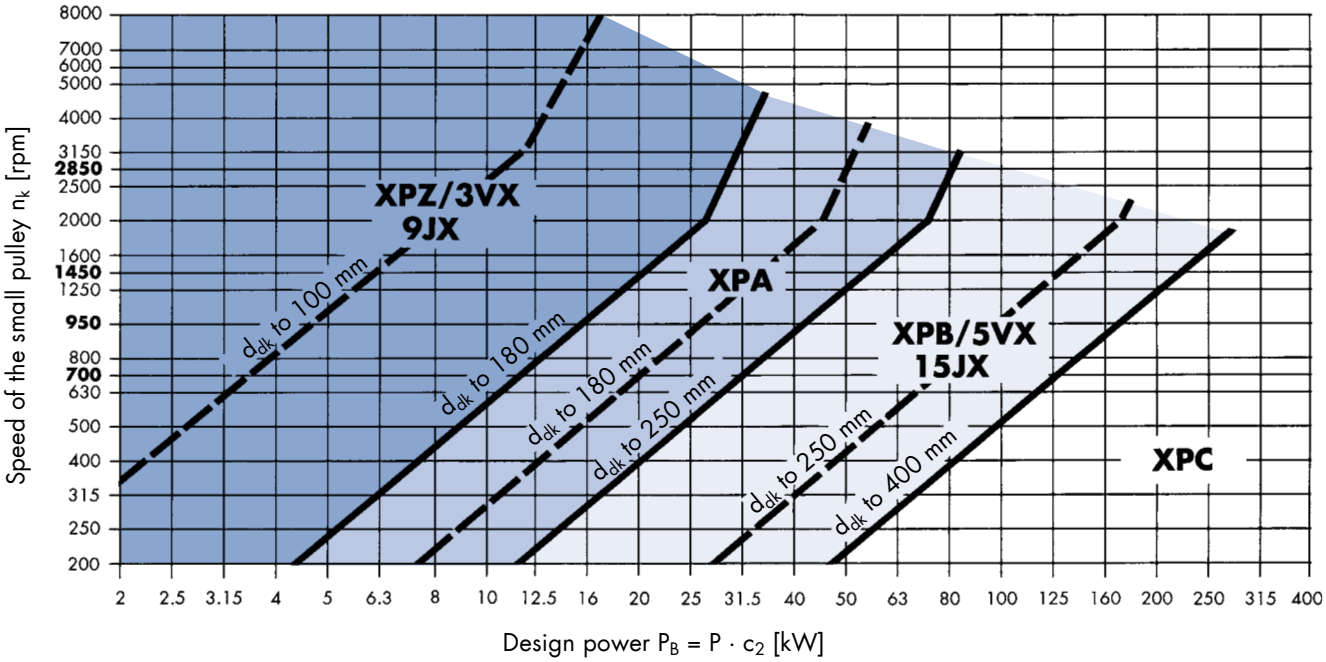

Diagram 5: optibelt SUPER TX M=S V-belts

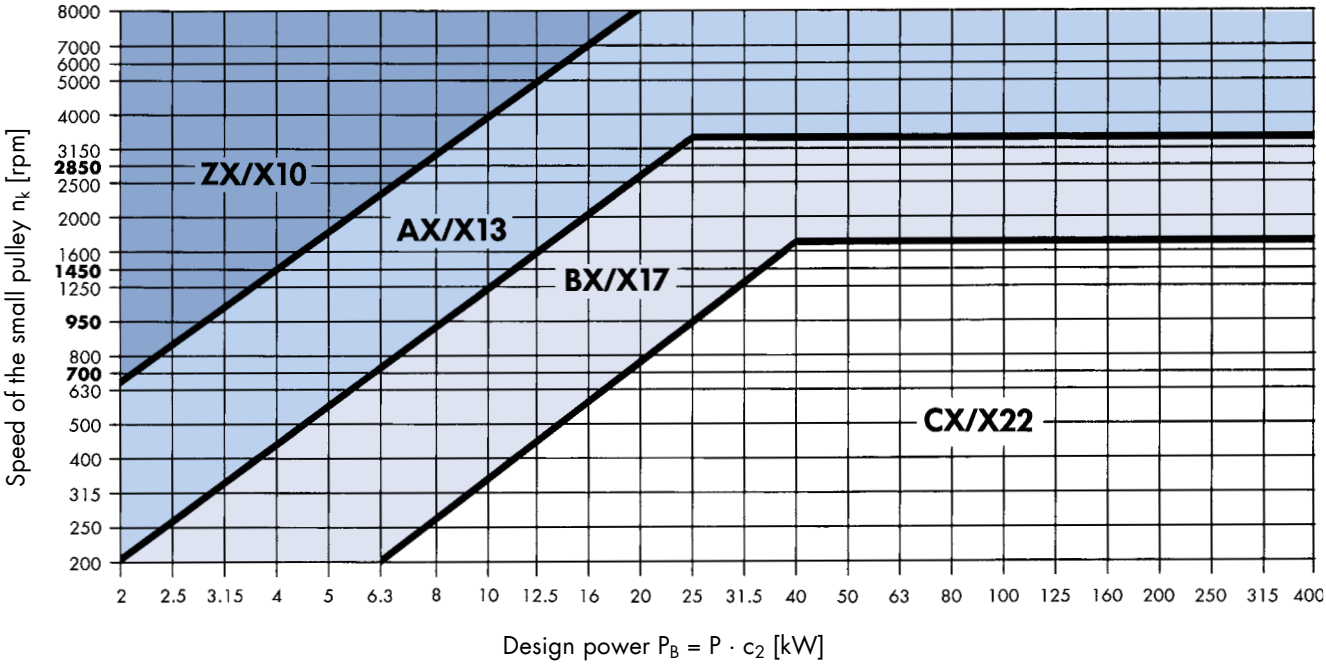

DRIVE CALCULATION
MINIMUM ALLOWANCE X/Y
FOR ADJUSTING CENTRE DISTANCE a_{nom}

Table 27: optibelt SK wedge belts

Datum length [mm]	Minimum allowance x [mm] – for tensioning	Minimum allowance y [mm] – for easy fitting			
		SPZ, XPZ	SPA, XPA	SPB, XPB	SPC, XPC
487 ≤ 670	10	10	10	–	–
> 670 ≤ 1000	15	15	15	–	–
> 1000 ≤ 1250	20	15	15	–	–
> 1250 ≤ 1800	25	20	20	20	–
> 1800 ≤ 2240	25	20	20	20	25
> 2240 ≤ 3000	35	20	20	20	30
> 3000 ≤ 4000	45	20	20	20	30
> 4000 ≤ 5000	55	20	20	25	30
> 5000 ≤ 6300	70	25	25	30	35
> 6300 ≤ 8000	85	25	25	35	40
> 8000 ≤ 10000	110	30	30	35	45
> 10000 ≤ 12500	135	–	–	35	45
> 12500 ≤ 15000	150	–	–	45	55
> 15000 ≤ 18000	190	–	–	45	55

Table 28: optibelt SK wedge belts

Datum length	Outside length [mm]	Minimum allowance x [mm] – for tensioning	Minimum allowance y [mm] – for easy fitting		
			3V/9N, 3VX/9NX	5V/15N, 5VX/15NX	8V/25N
> 265 ≤ 400	> 673 ≤ 1016	15	15	–	–
> 400 ≤ 475	> 1016 ≤ 1206	20	15	–	–
> 475 ≤ 710	> 1206 ≤ 1803	25	20	20	–
> 710 ≤ 850	> 1803 ≤ 2159	25	20	20	–
> 850 ≤ 1180	> 2159 ≤ 2997	35	20	20	40
> 1180 ≤ 1600	> 2997 ≤ 4064	45	20	20	40
> 1600 ≤ 2000	> 4064 ≤ 5080	55	20	25	40
> 2000 ≤ 2500	> 5080 ≤ 6350	70	–	30	45
> 2500 ≤ 3150	> 6350 ≤ 8001	85	–	35	45
> 3150 ≤ 4000	> 8001 ≤ 10160	110	–	35	50
> 4000 ≤ 5000	> 10160 ≤ 12700	135	–	35	50
> 5000 ≤ 6000	> 12700 ≤ 15240	150	–	45	60
> 6000 ≤ 7100	> 15240 ≤ 18034	190	–	45	60

 © ARNTZ OPTIBELT GROUP, GERMANY

DRIVE CALCULATION
MINIMUM ALLOWANCE X/Y
FOR ADJUSTING CENTRE DISTANCE a_{nom}

Table 29: optibelt VB classic V-belts

Datum length [mm]	Minimum allowance x [mm] – for tensioning	Minimum allowance y [mm] – for easy fitting										
		5	Y/6	8	Z/10, ZX/X10	A/13, AX/X13	B/17, BX/X17	20	C/22, CX/X22	25	D/32	E/40
≤ 200	5	10	–	–	–	–	–	–	–	–	–	–
> 200 ≤ 250	5	10	10	–	–	–	–	–	–	–	–	–
> 250 ≤ 315	5	10	10	10	10	–	–	–	–	–	–	–
> 315 ≤ 670	10	–	–	10	10	10	10	–	–	–	–	–
> 670 ≤ 1000	15	–	–	10	15	15	15	–	–	–	–	–
> 1000 ≤ 1250	20	–	–	15	15	15	15	20	20	–	–	–
> 1250 ≤ 1800	25	–	–	15	20	20	20	20	25	25	–	–
> 1800 ≤ 2240	25	–	–	20	20	20	20	25	25	30	35	–
> 2240 ≤ 3000	35	–	–	–	20	20	20	25	30	30	35	40
> 3000 ≤ 4000	45	–	–	–	20	20	20	25	30	30	35	40
> 4000 ≤ 5000	55	–	–	–	20	20	20	30	30	30	35	40
> 5000 ≤ 6300	70	–	–	–	–	20	25	35	35	35	40	45
> 6300 ≤ 8000	85	–	–	–	–	20	25	40	40	40	45	50
> 8000 ≤ 10000	110	–	–	–	–	25	25	40	45	45	45	50
> 10000 ≤ 12500	135	–	–	–	–	–	30	40	45	45	50	55
> 12500 ≤ 15000	150	–	–	–	–	–	40	50	55	55	60	65
> 15000 ≤ 18000	190	–	–	–	–	–	40	50	55	55	60	65

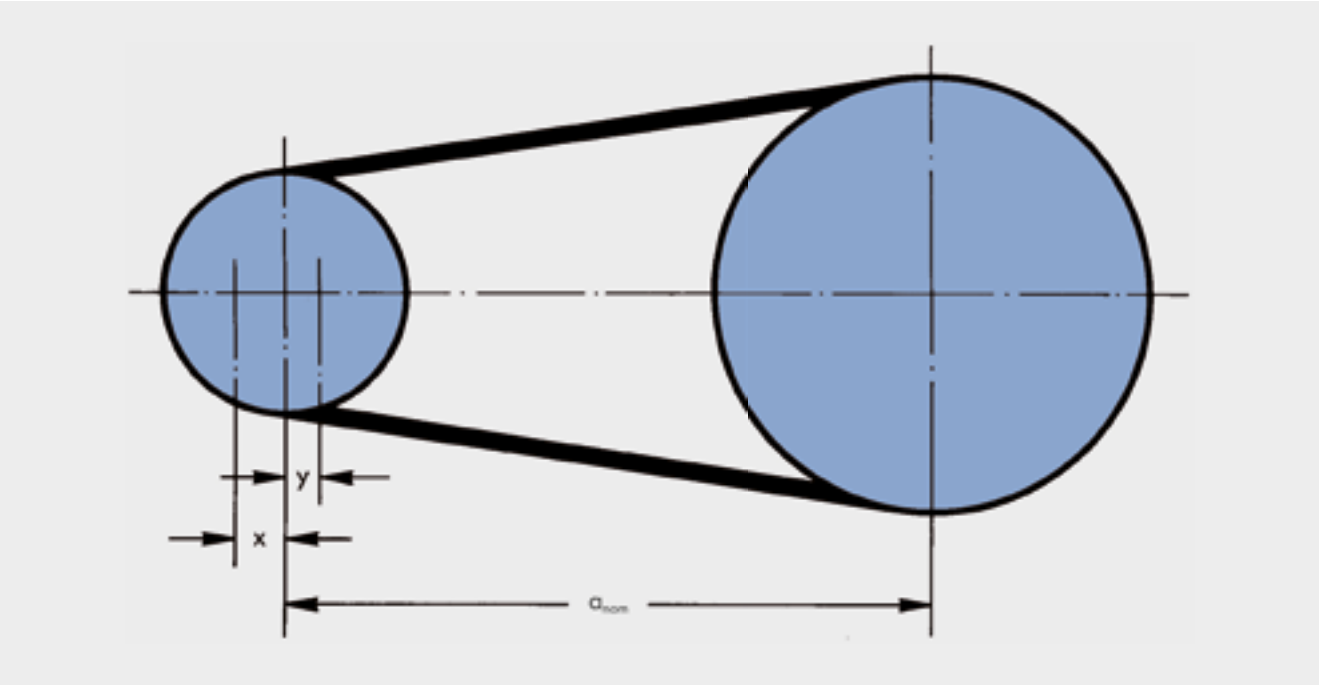

DRIVE CALCULATION
MINIMUM ALLOWANCE X/Y
FOR ADJUSTING CENTRE DISTANCE a_{nom}

Table 30: optibelt KB kraftbands with wedge belts

Datum length	Outside length [mm]	Minimum allowance x [mm] – for tensioning	Minimum allowance y [mm] – for easy fitting			
			SPZ, 3V/9J	SPA, SPB, 5V/15J	8V/25J	SPC
475 ≤ 710	1206 ≤ 1803	25	35	40	–	–
> 710 ≤ 850	> 1803 ≤ 2159	25	35	40	–	–
> 850 ≤ 1180	> 2159 ≤ 2997	35	35	40	80	–
> 1180 ≤ 1600	> 2997 ≤ 4064	45	35	40	80	80
> 1600 ≤ 2000	> 4064 ≤ 5080	55	40	45	85	85
> 2000 ≤ 2500	> 5080 ≤ 6350	70	45	50	85	85
> 2500 ≤ 3150	> 6350 ≤ 8001	85	50	55	95	95
> 3150 ≤ 4000	> 8001 ≤ 10160	110	50	55	95	95
> 4000 ≤ 5000	> 10160 ≤ 12700	135	–	60	95	95
> 5000 ≤ 6000	> 12700 ≤ 15240	150	–	70	105	105
> 6000 ≤ 7100	> 15240 ≤ 18034	190	–	85	120	120

Note: For kraftbands in profiles SPZ, SPA, SPB and SPC please take into account the datum lengths.
For raw edge kraftbands the same x/y values apply.

Table 31: optibelt KB kraftbands with classic V-belts

Length [mm]	Minimum allowance x [mm] – for tensioning	Minimum allowance y [mm] – for easy fitting			
		A/HA	B/HB	C/HC	D/HD
1200 ≤ 1800	25	30	35	–	–
> 1800 ≤ 2240	25	30	35	–	–
> 2240 ≤ 3000	35	30	35	50	85
> 3000 ≤ 4000	45	30	35	50	85
> 4000 ≤ 5000	55	30	40	55	90
> 5000 ≤ 6300	70	35	45	60	90
> 6300 ≤ 8000	85	45	55	65	100
> 8000 ≤ 10000	110	45	55	65	100
> 10000 ≤ 12500	135	50	60	75	100
> 12500 ≤ 15000	150	60	70	85	110
> 15000 ≤ 18000	190	70	85	95	125

 © ARNTZ OPTIBELT GROUP, GERMANY

DRIVE CALCULATION
FORMULAS AND CALCULATION EXAMPLE

Drive machine

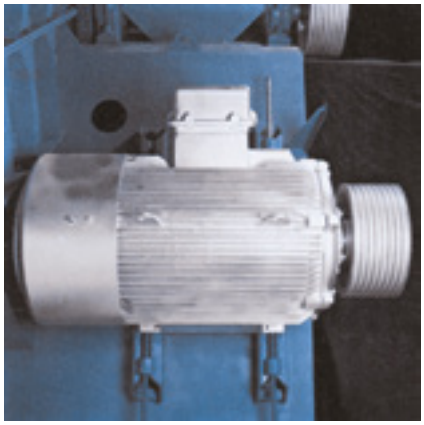

3-phase motor
P = 132 kW
n_1 = 1485 rpm
Star delta start
Starting torque $M_A = 0.65\ M_N$

Operating conditions

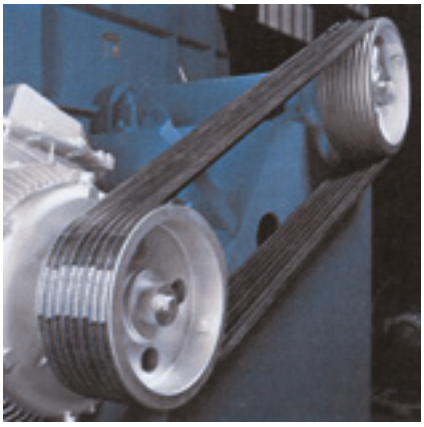

Daily operation: approx. 18 hours
Number of starts: one per day
Operating conditions:
normal room temperature, no exposure to oil, water or dust
Drive centre distance: between 1300 and 1500 mm, variable
Pulley diameter: $d_{d1} \leq 300$ mm

Driven machine

Fan
P = 132 kW
n_2 = 825 ± 15 rpm
Start-up: under load
Type of loading: continuous

Note: The calculation takes into account the standard specified according to ISO for datum diameter d_d (formerly pitch diameter d_w) and datum length L_d (formerly pitch length L_w).

Formulas	Calculation example
Load factor c_2 from table 23, page 75	c_2 = **1.3**
Design power $P_B = P \cdot c_2$	$P_B = 132 \cdot 1.3$ = **171.6 kW**
Selection of belt profile from diagram 2, page 80	**SPB**
Speed ratio $i = \frac{n_1}{n_2} = \frac{d_{d2}}{d_{d1}}$	$i = \frac{1485}{825}$ = **1.8**
Datum diameter of the grooved pulley d_{d1} selected from table 15, page 52 $d_{d2} = d_{d1} \cdot i$ $d_{d1} = \frac{d_{d2}}{i}$	d_{d1} = **280 mm** selected d_{d2} = 280 mm · 1.8 = 504 d_{d2} = **500 mm** selected from table 15, page 52

DRIVE CALCULATION
FORMULAS AND CALCULATION EXAMPLE

Formulas	Calculation example
Verification of driven unit speed $i_{vorh} = \frac{d_{d2}}{d_{d1}}$ $n_{2\ vorh} = \frac{n_1}{i_{vorh}}$	$i_{vorh} = \frac{500}{280} = \mathbf{1.79}$ $n_{2\ vorh} = \frac{1485}{1.79} = \mathbf{830\ min^{-1}}$ required: 825 ± 15 rpm (requirement met)
Drive centre distance (preliminary choice) recommended: $a > 0.7\ (d_{dg} + d_{dk})$ $a < 2\ (d_{dg} + d_{dk})$	$a =$ **1400 mm** selected
Datum length of the V-belt $L_{dth} \approx 2\,a + 1.57\,(d_{dg} + d_{dk}) + \frac{(d_{dg} - d_{dk})^2}{4\,a}$ actual: $L_{dth} = 2\,a \cdot \sin\frac{\beta}{2} + \frac{\pi}{2}(d_{dg} + d_{dk}) + \frac{\alpha \cdot \pi}{180°}(d_{dg} - d_{dk})$	$L_{dth} \approx 2 \cdot 1400 + 1.57 \cdot 780 + \frac{220^2}{4 \cdot 1400} \approx 4033$ mm next standard length selected from page 27 $L_{dSt} =$ **4000 mm**
Centre distance Calculated from L_{dSt} and L_{dth} (if $L_{dSt} > L_{dth}$) $a_{nom} \approx a + \frac{L_{dSt} - L_{dth}}{2}$ (if $L_{dSt} < L_{dth}$) $a_{nom} \approx a - \frac{L_{dth} - L_{dSt}}{2}$ actual: $a_{nom} = \frac{L_{dSt} - \frac{\pi}{2}(d_{dg} + d_{dk})}{4} + \sqrt{\left[\frac{L_{dSt} - \frac{\pi}{2}(d_{dg} + d_{dk})}{4}\right]^2 - \frac{(d_{dg} - d_{dk})^2}{8}}$	$a_{nom} \approx 1400 - \frac{4033 - 4000}{2} \approx$ **1383.5 mm**
Minimum allowance x/y for adjusting centre distance a_{nom} x/y from table 28, page 82	x ≥ **45 mm** / y ≥ **20 mm**
Speed and flex rate of belt $v = \frac{d_{dk} \cdot n_k}{19100}$ ($v_{max} \approx 55$ m/s) $f_b = \frac{2 \cdot 1000 \cdot v}{L_{dSt}}$ ($f_{B\ max} \approx 100\ s^{-1}$)	$v = \frac{280 \cdot 1485}{19100} =$ **21.76 m/s** $f_b = \frac{2 \cdot 1000 \cdot 21.76}{4000} =$ **10.88 s^{-1}**

 © ARNTZ OPTIBELT GROUP, GERMANY

DRIVE CALCULATION
FORMULAS AND CALCULATION EXAMPLE

Formulas	Calculation example
Arc of contact and correction factor $\frac{d_{dg} - d_{dk}}{a_{nom}}$ $\beta°$ approximate and c_1 from table 22, page 74 actual: $\cos\frac{\beta}{2} = \frac{d_{dg} - d_{dk}}{2\ a_{nom}}$	$\frac{500 - 280}{1383.5} = 0.16$ $\left.\begin{array}{l}\beta \approx 170° \\ c_1 = \mathbf{1.0}\end{array}\right\}$ linearly interpolated
Length factor c_3 from table 24, page 76	$c_3 = \mathbf{1.02}$
Nominal power per belt P_N for $\left\{\begin{array}{ll} d_{dk} & = 280\text{ mm} \\ i & = 1.79 \\ n_k & = 1485\text{ min}^{-1}\end{array}\right.$ profile SPB from table 43, page 100	$P_N = 20.63 + 1.24 = \mathbf{21.87\ kW}$
Number of belts $z = \frac{P \cdot c_2}{P_N \cdot c_1 \cdot c_3}$	$z = \frac{132 \cdot 1.3}{21.87 \cdot 1.0 \cdot 1.02} = \mathbf{7.69}$ suggested: **8 optibelt SK high performance wedge belts SPB 4000 L_d S=C Plus**
Profile SPB:	
Minimum static tension per belt (multiply by factor 1.3 at initial installation) $T \approx \frac{500 \cdot (2.04 - c_1) \cdot P_B}{c_1 \cdot z \cdot v} + k \cdot v^2$ k from diagram 8, page 146	$T \approx \frac{500 \cdot (2.04 - 1.0) \cdot 171.6}{1.0 \cdot 8 \cdot 21.76} + 0.19 \cdot 473.5 \approx \mathbf{593\ N}$ initial installation: $T = 593\text{ N} \cdot 1.3 = \mathbf{771\ N}$
Minimum static shaft load (multiply by factor 1.3 at initial installation) $S_a \approx 2\ T \cdot \sin\frac{\beta}{2} \cdot z$	$S_a \approx 2 \cdot 593 \cdot 0.9962 \cdot 8 \approx \mathbf{9452\ N}$ initial installation: $S_a = 9452\text{ N} \cdot 1.3 = \mathbf{12288\ N}$
Belt deflection $E_a \approx \frac{E \cdot L}{100}$ E from diagram 8, page 146 $L = a_{nom} \cdot \sin\frac{\beta}{2}$	$E_a \approx \frac{2.7 \cdot 1378}{100} \approx \mathbf{37\ mm}$ $E \approx 2.7\text{ mm}$ $L = 1383.5 \cdot 0.9962 = 1378\text{ mm}$

DRIVE CALCULATION
optibelt CAP

The drive requires:

– 8 pieces optibelt SK wedge belts SPC 6300 L_d S=C Plus
– optibelt KS V-grooved pulley for taper bushes TB SPC 400-8
– optibelt TB taper bush 4545 (bore diameter 55-110 mm)
– optibelt KS V-grooved pulleys for taper bushes TB SPC 800-8
– optibelt TB taper bush 5050 (bore diameter 70-125 mm)

				Deviations/Notes
Type of driver unit	**:**	**electric motor**		
Type of driven unit	**:**	**fans > 7.5 kW**		
Calculation power	PB:	364.00	kW	
Drive power	**P:**	**260.00**	**kW**	
Torque at driver pulley	M:	1399	Nm	
Driver speed	**n_1:**	**1775**	**1/min**	
Effective driven speed	**n_2:**	**888**	**1/min**	–1 1/min
Datum diameter pulley 1	**d_{d1}:**	**400.00**	**mm**	
Datum diameter pulley 2	**d_{d2}:**	**800.00**	**mm**	
Datum length	L_d:	6300	mm	
Actual centres	a:	**2198.40**	**mm**	–1.60 mm
Actual drive ratio	i:	2.00		0.1 %
Adjustment required for belt installation	y:	35.00	mm	
Adjustment required for belt tensioning	x:	70.00	mm	
Actual load factor	**c_2:**	**1.61**		
Belt speed	v:	37.17	m/s	Dynamic balancing required
Flex rate	f_B:	11.80	1/s	
Nominal power per belt	P_N:	51.84	kW	
Arc of contact factor	c_1:	0.99		
Belt length factor	c_3:	1.02		
Arc of contact on small pulley	β:	169.60	°	
Pulley face width	b_2:	212.50	mm	
Span length	<:	2189.30	mm	
Calculated number of belts	**zth:**	**6.94**		for raised c_2 = 1.40
Weight of drive		276.87	kg	
Static shaft load at initial installation	Sast:	23653	N	
Static shaft load at re-tensioning	Sast:	18195	N	
Dynamic shaft load	Sadyn:	10283	N	

Tensioning methods for raised c_2 = 1.40		**Initial installation** new belts	**Operating tension** existing belts
1. optibelt OPTIKRIK II + III	static tension per V-belt:	1484 N	1142 N
2. Belt deflection with tension gauge	test load:	125 N	125 N
	deflection:	41 mm	51 mm
3. Length addition per 1000 mm belt length	:	5.7 mm	4.3 mm
4. Optibelt frequency tension tester	frequency:	14.3 1/s	12.6 1/s

Regarding liability concerning this drive design we refer to our Terms and Conditions.

 © ARNTZ OPTIBELT GROUP, GERMANY

POWER RATINGS

optibelt RED POWER 3 PROFILE SPZ, 3V/9N, 3V/9J

NOMINAL POWER RATING P_N [kW]

FOR β = 180° AND L_d = 1600 mm

Table 32

Pulleys	v [m/s]	n_k [min⁻¹]	Datum diameter of small pulley d_{dk} [mm] 63	71	80	85	90	95	100	112	125	132	140	150	160	180	200	Additional power [kW] per belt for speed ratio i 1.01 to 1.05	1.06 to 1.26	1.27 to 1.57	> 1.57
Statically balanced		**700**	0.72	0.96	1.22	1.37	1.51	1.66	1.80	2.14	2.50	2.70	2.92	3.19	3.47	4.02	4.56	0.01	0.06	0.09	0.11
		950	0.92	1.24	1.58	1.78	1.97	2.16	2.35	2.80	3.29	3.54	3.84	4.20	4.56	5.28	5.99	0.01	0.09	0.12	0.15
		1450	1.30	1.76	2.27	2.56	2.83	3.12	3.40	4.06	4.75	5.14	5.56	6.08	6.60	7.63	8.63	0.02	0.13	0.19	0.23
		2850	2.16	3.00	3.94	4.44	4.94	5.44	5.93	7.08	8.28	8.92	9.61	10.46	11.29	12.84	14.26	0.04	0.26	0.37	0.46
		100	0.13	0.18	0.22	0.24	0.26	0.29	0.31	0.37	0.43	0.46	0.49	0.54	0.59	0.67	0.77	0.00	0.01	0.01	0.02
		200	0.25	0.32	0.41	0.46	0.49	0.54	0.59	0.70	0.80	0.86	0.94	1.02	1.10	1.28	1.45	0.00	0.02	0.03	0.03
		300	0.36	0.46	0.58	0.65	0.71	0.78	0.84	1.00	1.16	1.25	1.36	1.49	1.61	1.86	2.11	0.00	0.03	0.04	0.05
		400	0.46	0.59	0.74	0.83	0.92	1.01	1.09	1.30	1.51	1.63	1.76	1.93	2.09	2.42	2.75	0.01	0.04	0.05	0.06
		500	0.54	0.72	0.91	1.02	1.12	1.22	1.33	1.58	1.85	1.99	2.16	2.36	2.56	2.96	3.36	0.01	0.05	0.07	0.08
		600	0.64	0.84	1.07	1.19	1.32	1.44	1.56	1.86	2.18	2.35	2.54	2.78	3.02	3.49	3.96	0.01	0.06	0.08	0.10
		700	0.72	0.96	1.22	1.37	1.51	1.66	1.80	2.14	2.50	2.70	2.92	3.19	3.47	4.02	4.56	0.01	0.06	0.09	0.11
		800	0.80	1.07	1.37	1.54	1.69	1.86	2.02	2.40	2.82	3.04	3.29	3.60	3.91	4.52	5.14	0.01	0.07	0.11	0.13
		900	0.89	1.19	1.51	1.69	1.88	2.06	2.24	2.66	3.13	3.37	3.66	4.01	4.34	5.03	5.70	0.01	0.08	0.12	0.15
		1000	0.96	1.30	1.66	1.86	2.06	2.26	2.46	2.93	3.43	3.71	4.02	4.39	4.78	5.52	6.26	0.01	0.09	0.13	0.16
		1100	1.04	1.40	1.80	2.02	2.23	2.46	2.68	3.19	3.74	4.03	4.37	4.79	5.20	6.01	6.80	0.02	0.10	0.14	0.18
		1200	1.12	1.50	1.93	2.17	2.41	2.65	2.88	3.44	4.03	4.36	4.72	5.16	5.60	6.48	7.34	0.02	0.11	0.16	0.19
		1300	1.19	1.61	2.08	2.33	2.58	2.83	3.08	3.68	4.33	4.67	5.05	5.53	6.01	6.95	7.86	0.02	0.12	0.17	0.21
		1400	1.26	1.72	2.21	2.48	2.75	3.02	3.29	3.94	4.62	4.98	5.39	5.90	6.41	7.40	8.38	0.02	0.13	0.18	0.23
		1500	1.33	1.81	2.34	2.63	2.92	3.20	3.49	4.18	4.90	5.28	5.72	6.26	6.80	7.85	8.88	0.02	0.14	0.20	0.24
	5	1600	1.40	1.91	2.47	2.77	3.08	3.38	3.70	4.42	5.17	5.58	6.05	6.62	7.19	8.29	9.36	0.02	0.15	0.21	0.26
		1700	1.48	2.00	2.59	2.93	3.24	3.56	3.89	4.64	5.45	5.88	6.37	6.97	7.56	8.71	9.84	0.02	0.16	0.22	0.27
		1800	1.54	2.10	2.72	3.06	3.41	3.74	4.08	4.87	5.72	6.17	6.68	7.31	7.93	9.13	10.30	0.03	0.17	0.24	0.29
		1900	1.61	2.20	2.84	3.20	3.56	3.91	4.27	5.10	5.99	6.46	6.98	7.64	8.29	9.54	10.75	0.03	0.18	0.25	0.31
		2000	1.67	2.28	2.96	3.35	3.72	4.09	4.45	5.33	6.25	6.74	7.30	7.97	8.64	9.94	11.18	0.03	0.19	0.26	0.32
		2100	1.73	2.38	3.08	3.48	3.86	4.26	4.64	5.54	6.50	7.02	7.58	8.29	8.99	10.32	11.60	0.03	0.19	0.28	0.34
		2200	1.79	2.46	3.20	3.61	4.02	4.42	4.82	5.76	6.76	7.28	7.88	8.60	9.32	10.69	12.01	0.03	0.20	0.29	0.35
		2300	1.85	2.56	3.32	3.74	4.16	4.58	4.99	5.98	7.01	7.55	8.16	8.92	9.65	11.06	12.40	0.03	0.21	0.30	0.37
		2400	1.91	2.64	3.44	3.88	4.31	4.74	5.17	6.18	7.25	7.81	8.44	9.22	9.97	11.41	12.77	0.03	0.22	0.32	0.39
		2500	1.97	2.72	3.55	4.01	4.45	4.91	5.34	6.38	7.49	8.06	8.71	9.50	10.27	11.75	13.13	0.04	0.23	0.33	0.40
		2600	2.03	2.81	3.66	4.13	4.60	5.06	5.52	6.59	7.72	8.32	8.98	9.79	10.58	12.08	13.48	0.04	0.24	0.34	0.42
		2700	2.09	2.88	3.77	4.26	4.74	5.21	5.68	6.79	7.94	8.56	9.24	10.07	10.87	12.40	13.80	0.04	0.25	0.35	0.44
		2800	2.14	2.96	3.88	4.38	4.87	5.36	5.84	6.98	8.17	8.80	9.49	10.33	11.15	12.70	14.11	0.04	0.26	0.37	0.45
		2900	2.20	3.05	3.98	4.50	5.00	5.51	6.01	7.18	8.39	9.02	9.73	10.60	11.42	12.98	14.40	0.04	0.27	0.38	0.47
	10	3000	2.24	3.12	4.09	4.62	5.14	5.65	6.17	7.36	8.60	9.25	9.97	10.85	11.69	13.26	14.68	0.04	0.28	0.39	0.48
		3100	2.29	3.19	4.19	4.73	5.27	5.80	6.32	7.54	8.81	9.47	10.20	11.09	11.94	13.52	14.93	0.04	0.29	0.41	0.50
		3200	2.34	3.28	4.30	4.85	5.40	5.94	6.47	7.72	9.01	9.68	10.43	11.33	12.18	13.76	15.17	0.05	0.30	0.42	0.52
		3300	2.39	3.35	4.39	4.96	5.52	6.07	6.62	7.90	9.20	9.89	10.64	11.56	12.42	14.00	15.37	0.05	0.31	0.43	0.53
		3400	2.44	3.42	4.49	5.06	5.64	6.20	6.77	8.06	9.40	10.09	10.86	11.77	12.64	14.22	15.58	0.05	0.31	0.45	0.55
		3500	2.48	3.48	4.58	5.17	5.76	6.34	6.90	8.22	9.59	10.28	11.05	11.98	12.84	14.41	15.74	0.05	0.32	0.46	0.56
		3600	2.53	3.55	4.67	5.28	5.88	6.47	7.04	8.39	9.77	10.48	11.26	12.18	13.04	14.60	15.90	0.05	0.33	0.47	0.58
		3700	2.58	3.62	4.76	5.39	5.99	6.59	7.18	8.54	9.94	10.66	11.44	12.36	13.22	14.77	16.03	0.05	0.34	0.49	0.60
		3800	2.62	3.68	4.85	5.48	6.11	6.72	7.31	8.69	10.10	10.82	11.62	12.54	13.40	14.92	16.14	0.05	0.35	0.50	0.61
		3900	2.66	3.76	4.94	5.58	6.22	6.84	7.44	8.84	10.27	10.99	11.78	12.71	13.57	15.06	16.22	0.06	0.36	0.51	0.63
		4000	2.70	3.82	5.03	5.68	6.32	6.95	7.56	8.99	10.42	11.15	11.94	12.86	13.72	15.18	16.28	0.06	0.37	0.53	0.64
		4100	2.75	3.88	5.11	5.77	6.42	7.07	7.69	9.12	10.57	11.30	12.10	13.01	13.85	15.28	16.32	0.06	0.38	0.54	0.66
		4200	2.78	3.94	5.18	5.87	6.53	7.18	7.80	9.25	10.72	11.45	12.24	13.15	13.98	15.36	16.33	0.06	0.39	0.55	0.68
		4300	2.82	4.00	5.27	5.95	6.62	7.28	7.92	9.38	10.85	11.58	12.37	13.27	14.09	15.42	16.32	0.06	0.40	0.57	0.69
		4400	2.86	4.04	5.34	6.04	6.72	7.38	8.03	9.50	10.98	11.71	12.49	13.39	14.18	15.47	16.28	0.06	0.41	0.58	0.71
	15	4500	2.89	4.10	5.41	6.12	6.82	7.49	8.14	9.62	11.10	11.83	12.61	13.49	14.27	15.49	16.21	0.06	0.42	0.59	0.73
		4600	2.93	4.15	5.50	6.20	6.90	7.58	8.24	9.73	11.21	11.94	12.71	13.58	14.34	15.49	16.13	0.07	0.43	0.60	0.74
		4700	2.96	4.21	5.56	6.29	7.00	7.68	8.34	9.84	11.32	12.05	12.80	13.66	14.40	15.48	16.01	0.07	0.44	0.62	0.76
		4800	2.99	4.26	5.63	6.36	7.08	7.76	8.44	9.95	11.42	12.14	12.89	13.73	14.44	15.44	15.86	0.07	0.44	0.63	0.77
		4900	3.02	4.31	5.70	6.43	7.15	7.85	8.53	10.04	11.51	12.23	12.97	13.79	14.46	15.38	15.68	0.07	0.45	0.64	0.79
		5000	3.05	4.36	5.76	6.50	7.24	7.93	8.62	10.14	11.60	12.30	13.03	13.82	14.47	15.31	15.48	0.07	0.46	0.66	0.81
		5100	3.08	4.40	5.82	6.58	7.31	8.02	8.70	10.22	11.68	12.37	13.09	13.85	14.47	15.22	15.25	0.07	0.47	0.67	0.82
		5200	3.11	4.44	5.88	6.64	7.38	8.09	8.77	10.30	11.75	12.43	13.13	13.87	14.45	15.10	14.99	0.07	0.48	0.68	0.84
		5300	3.13	4.49	5.94	6.71	7.45	8.16	8.86	10.37	11.81	12.48	13.16	13.87	14.41	14.95		0.08	0.49	0.70	0.85
		5400	3.16	4.52	5.99	6.77	7.51	8.23	8.92	10.44	11.87	12.53	13.19	13.86	14.36	14.78		0.08	0.50	0.71	0.87
		5500	3.18	4.56	6.04	6.83	7.57	8.29	8.99	10.50	11.92	12.56	13.20	13.84	14.29	14.59		0.08	0.51	0.72	0.89
		5600	3.20	4.60	6.10	6.88	7.63	8.36	9.05	10.56	11.95	12.58	13.20	13.80	14.21	14.39		0.08	0.52	0.74	0.90
		5800	3.24	4.67	6.18	6.98	7.74	8.47	9.16	10.66	12.00	12.60	13.16	13.68	13.98	13.88		0.08	0.54	0.76	0.93
	20	6000	3.28	4.73	6.26	7.07	7.84	8.57	9.25	10.73	12.01	12.58	13.08	13.50	13.69			0.09	0.56	0.79	0.97
		6200	3.30	4.79	6.34	7.15	7.92	8.64	9.32	10.76	12.00	12.50	12.95	13.27	13.33			0.09	0.57	0.81	1.00
		6400	3.32	4.82	6.40	7.21	7.98	8.70	9.38	10.79	11.94	12.40	12.76	12.97	12.89			0.09	0.59	0.84	1.03
		6600	3.34	4.87	6.46	7.26	8.03	8.75	9.41	10.78	11.86	12.24	12.53	12.61				0.09	0.61	0.87	1.06
		6800	3.35	4.90	6.49	7.31	8.06	8.77	9.43	10.74	11.72	12.05	12.24	12.18				0.10	0.63	0.89	1.10
		7000	3.36	4.92	6.52	7.33	8.09	8.78	9.42	10.67	11.54	11.81	11.89	11.69	$v_{max} \leq 55$ m/s			0.10	0.65	0.92	1.13
		7200	3.36	4.93	6.54	7.34	8.09	8.77	9.40	10.57	11.34	11.51	11.50					0.10	0.67	0.95	1.16
	25	7400	3.35	4.93	6.54	7.34	8.08	8.75	9.34	10.44	11.09	11.17	11.03					0.11	0.69	0.97	1.19
		7600	3.34	4.93	6.54	7.33	8.05	8.70	9.26	10.28	10.79	10.78			v > 42 m/s. Please consult our Application Engineering Department.			0.11	0.70	1.00	1.22
		7800	3.32	4.92	6.52	7.30	8.00	8.63	9.17	10.09	10.45	10.33						0.11	0.72	1.03	1.26
		8000	3.30	4.91	6.49	7.26	7.94	8.54	9.05	9.86	10.06							0.11	0.74	1.05	1.29
		8200	3.26	4.87	6.44	7.20	7.86	8.44	8.90	9.61	9.64							0.12	0.76	1.08	1.32
		8400	3.23	4.84	6.38	7.13	7.76	8.30	8.74	9.32	9.16							0.12	0.78	1.10	1.35
			30	35			40											v [m/s]			
Dynamically balanced (for details see DIN 2211)																		Pulleys			

Note: Pulley diameters shown are outside diameters for sections 3V/9N, 3V/9J.

optibelt RED POWER 3

POWER RATINGS

optibelt RED POWER 3 PROFILE SPA

NOMINAL POWER RATING P_N [kW]

FOR β = 180° AND L_d = 2500 mm

Table 33

Pulleys	v [m/s]	n_k [min⁻¹]	Datum diameter of small pulley d_{dk} [mm] 90	95	100	112	125	132	140	150	160	180	200	224	250	280	315	Additional power [kW] per belt for speed ratio i 1.01 to 1.05	1.06 to 1.26	1.27 to 1.57	> 1.57
Statically balanced		**700**	1.61	1.85	2.08	2.64	3.24	3.56	3.94	4.39	4.84	5.74	6.64	7.69	8.82	10.10	11.59	0.02	0.15	0.21	0.26
		950	2.06	2.38	2.69	3.43	4.22	4.66	5.14	5.74	6.34	7.52	8.69	10.08	11.56	13.24	15.14	0.03	0.20	0.29	0.36
		1450	2.88	3.34	3.79	4.88	6.05	6.67	7.38	8.26	9.13	10.84	12.52	14.50	16.57	18.90	21.52	0.05	0.31	0.44	0.54
		2850	4.69	5.53	6.35	8.29	10.36	11.44	12.65	14.15	15.60	18.40	21.02	23.95	26.82	29.70	32.41	0.09	0.61	0.87	1.07
		100	0.31	0.35	0.38	0.48	0.58	0.62	0.68	0.77	0.84	0.98	1.13	1.31	1.49	1.70	1.96	0.00	0.02	0.03	0.04
		200	0.56	0.64	0.71	0.89	1.07	1.18	1.28	1.43	1.57	1.85	2.14	2.47	2.82	3.24	3.71	0.01	0.04	0.06	0.07
		300	0.79	0.90	1.01	1.26	1.54	1.68	1.85	2.06	2.27	2.68	3.08	3.58	4.09	4.69	5.39	0.01	0.06	0.09	0.11
		400	1.01	1.15	1.30	1.63	1.98	2.17	2.40	2.66	2.94	3.48	4.01	4.64	5.33	6.10	7.00	0.01	0.09	0.12	0.15
		500	1.22	1.39	1.56	1.98	2.41	2.65	2.92	3.25	3.59	4.25	4.91	5.68	6.52	7.48	8.57	0.02	0.11	0.15	0.19
		600	1.42	1.62	1.82	2.32	2.83	3.12	3.43	3.83	4.22	5.00	5.77	6.70	7.68	8.81	10.10	0.02	0.13	0.18	0.22
		700	1.61	1.85	2.08	2.64	3.24	3.56	3.94	4.39	4.84	5.74	6.64	7.69	8.82	10.10	11.59	0.02	0.15	0.21	0.26
		800	1.80	2.06	2.33	2.96	3.65	4.01	4.42	4.93	5.45	6.47	7.46	8.66	9.94	11.38	13.04	0.03	0.17	0.24	0.30
		900	1.97	2.27	2.57	3.28	4.03	4.44	4.90	5.47	6.05	7.18	8.29	9.61	11.02	12.62	14.46	0.03	0.19	0.27	0.34
		1000	2.15	2.47	2.81	3.58	4.42	4.86	5.38	6.00	6.62	7.87	9.10	10.54	12.08	13.84	15.83	0.03	0.22	0.31	0.37
	5	1100	2.32	2.68	3.04	3.88	4.79	5.28	5.83	6.52	7.20	8.54	9.88	11.45	13.13	15.01	17.17	0.04	0.24	0.34	0.41
		1200	2.48	2.87	3.25	4.18	5.16	5.69	6.29	7.03	7.76	9.22	10.66	12.35	14.14	16.16	18.47	0.04	0.26	0.37	0.45
		1300	2.64	3.06	3.48	4.46	5.52	6.08	6.73	7.52	8.32	9.88	11.41	13.22	15.13	17.29	19.72	0.04	0.28	0.40	0.49
		1400	2.80	3.24	3.68	4.75	5.88	6.48	7.16	8.02	8.86	10.52	12.16	14.08	16.10	18.37	20.93	0.05	0.30	0.43	0.52
		1500	2.95	3.43	3.90	5.03	6.23	6.86	7.60	8.50	9.40	11.16	12.88	14.90	17.04	19.43	22.08	0.05	0.32	0.46	0.56
		1600	3.11	3.60	4.10	5.29	6.58	7.25	8.02	8.98	9.91	11.77	13.60	15.72	17.95	20.45	23.21	0.05	0.34	0.49	0.60
		1700	3.25	3.78	4.31	5.57	6.91	7.62	8.44	9.43	10.43	12.38	14.29	16.51	18.84	21.43	24.29	0.06	0.37	0.52	0.64
		1800	3.40	3.95	4.51	5.83	7.24	7.99	8.84	9.90	10.93	12.97	14.96	17.29	19.70	22.37	25.30	0.06	0.39	0.55	0.67
		1900	3.53	4.12	4.70	6.08	7.56	8.35	9.24	10.34	11.42	13.56	15.64	18.04	20.53	23.28	26.27	0.06	0.41	0.58	0.71
		2000	3.67	4.28	4.90	6.34	7.88	8.70	9.64	10.78	11.92	14.12	16.27	18.77	21.34	24.14	27.18	0.07	0.43	0.61	0.75
		2100	3.80	4.44	5.08	6.59	8.20	9.05	10.02	11.21	12.38	14.69	16.91	19.46	22.12	24.97	28.03	0.07	0.45	0.64	0.79
	10	2200	3.92	4.60	5.26	6.83	8.51	9.40	10.39	11.63	12.85	15.23	17.52	20.15	22.85	25.75	28.84	0.07	0.47	0.67	0.82
		2300	4.06	4.75	5.44	7.07	8.81	9.72	10.76	12.05	13.31	15.76	18.11	20.81	23.56	26.50	29.57	0.08	0.50	0.70	0.86
		2400	4.18	4.90	5.62	7.31	9.10	10.06	11.12	12.44	13.74	16.27	18.68	21.44	24.23	27.19	30.24	0.08	0.52	0.73	0.90
		2500	4.30	5.04	5.78	7.54	9.38	10.37	11.48	12.84	14.17	16.76	19.24	22.04	24.88	27.83	30.84	0.08	0.54	0.76	0.94
		2600	4.42	5.18	5.95	7.75	9.67	10.68	11.82	13.22	14.59	17.24	19.78	22.62	25.48	28.43	31.38	0.09	0.56	0.79	0.97
		2700	4.52	5.33	6.11	7.98	9.95	10.99	12.17	13.60	15.00	17.71	20.29	23.17	26.04	28.98	31.85	0.09	0.58	0.82	1.01
		2800	4.64	5.46	6.28	8.20	10.22	11.29	12.49	13.97	15.41	18.17	20.78	23.70	26.57	29.47	32.24	0.09	0.60	0.86	1.05
		2900	4.75	5.59	6.43	8.40	10.49	11.58	12.82	14.32	15.79	18.61	21.26	24.20	27.06	29.92	32.57	0.10	0.62	0.89	1.09
		3000	4.85	5.72	6.58	8.60	10.74	11.87	13.13	14.66	16.16	19.03	21.71	24.66	27.52	30.30	32.81	0.10	0.65	0.92	1.12
		3100	4.96	5.84	6.73	8.81	10.99	12.14	13.43	15.00	16.52	19.44	22.14	25.10	27.92	30.62	32.96	0.10	0.67	0.95	1.16
	15	3200	5.05	5.96	6.88	9.00	11.23	12.41	13.73	15.32	16.87	19.82	22.55	25.51	28.28	30.90	33.05	0.11	0.69	0.98	1.20
		3300	5.15	6.08	7.01	9.19	11.47	12.67	14.00	15.64	17.21	20.20	22.93	25.88	28.61	31.12	33.05	0.11	0.71	1.01	1.24
		3400	5.24	6.20	7.15	9.37	11.70	12.92	14.28	15.94	17.53	20.54	23.29	26.22	28.90	31.26		0.11	0.73	1.04	1.27
		3500	5.33	6.31	7.28	9.55	11.93	13.16	14.56	16.22	17.84	20.88	23.63	26.53	29.12	31.34		0.12	0.75	1.07	1.31
		3600	5.41	6.42	7.40	9.72	12.14	13.40	14.81	16.51	18.14	21.19	23.94	26.81	29.32	31.37		0.12	0.77	1.10	1.35
		3700	5.50	6.52	7.52	9.89	12.35	13.63	15.06	16.78	18.42	21.49	24.23	27.04	29.45	31.33		0.12	0.80	1.13	1.39
		3800	5.58	6.62	7.64	10.06	12.55	13.86	15.30	17.03	18.70	21.77	24.49	27.24	29.54			0.13	0.82	1.16	1.42
		3900	5.65	6.72	7.76	10.21	12.74	14.06	15.53	17.28	18.95	22.02	24.72	27.41	29.58			0.13	0.84	1.19	1.46
		4000	5.72	6.80	7.87	10.36	12.94	14.27	15.74	17.51	19.19	22.26	24.92	27.54	29.57			0.13	0.86	1.22	1.50
		4100	5.80	6.90	7.98	10.51	13.12	14.46	15.95	17.74	19.42	22.48	25.10	27.62	29.51			0.14	0.88	1.25	1.54
	20	4200	5.86	6.98	8.09	10.64	13.28	14.65	16.15	17.94	19.62	22.67	25.26	27.68	29.39			0.14	0.90	1.28	1.57
		4300	5.93	7.07	8.18	10.78	13.45	14.82	16.33	18.13	19.82	22.85	25.38	27.70				0.14	0.93	1.31	1.61
		4400	5.99	7.14	8.27	10.91	13.61	14.99	16.51	18.31	19.99	23.00	25.48	27.66				0.15	0.95	1.34	1.65
		4500	6.04	7.21	8.36	11.03	13.75	15.16	16.68	18.48	20.16	23.14	25.54	27.59				0.15	0.97	1.37	1.69
		4600	6.08	7.28	8.45	11.15	13.90	15.30	16.84	18.64	20.30	23.23	25.56	27.48				0.15	0.99	1.41	1.72
		4700	6.14	7.34	8.53	11.26	14.03	15.43	16.97	18.78	20.44	23.32	25.56					0.16	1.01	1.44	1.76
		4800	6.18	7.40	8.60	11.35	14.15	15.56	17.10	18.90	20.56	23.39	25.54					0.16	1.03	1.47	1.80
		4900	6.23	7.46	8.68	11.45	14.27	15.68	17.22	19.01	20.65	23.42	25.46					0.16	1.05	1.50	1.84
		5000	6.26	7.51	8.74	11.54	14.36	15.79	17.33	19.10	20.72	23.44	25.37					0.17	1.08	1.53	1.87
		5100	6.30	7.56	8.80	11.63	14.46	15.89	17.42	19.19	20.78	23.42	25.24					0.17	1.10	1.56	1.91
		5200	6.32	7.61	8.86	11.70	14.56	15.97	17.51	19.26	20.83	23.38	25.08					0.17	1.12	1.59	1.95
	25	5300	6.35	7.64	8.90	11.77	14.63	16.06	17.58	19.31	20.86	23.32						0.18	1.14	1.62	1.99
		5400	6.37	7.68	8.95	11.83	14.70	16.12	17.63	19.34	20.86	23.23						0.18	1.16	1.65	2.02
		5500	6.40	7.70	8.99	11.89	14.76	16.18	17.68	19.37	20.84	23.11						0.18	1.18	1.68	2.06
		5600	6.41	7.74	9.02	11.94	14.81	16.22	17.71	19.38	20.82	22.97						0.19	1.21	1.71	2.10
		5700	6.42	7.75	9.05	11.98	14.84	16.25	17.72	19.37	20.76	22.80						0.19	1.23	1.74	2.13
		5800	6.42	7.78	9.07	12.01	14.88	16.27	17.72	19.33	20.69	22.60						0.19	1.25	1.77	2.17
		5900	6.43	7.79	9.10	12.05	14.90	16.28	17.72	19.30	20.60							0.20	1.27	1.80	2.21
		6000	6.43	7.79	9.11	12.06	14.90	16.28	17.70	19.24	20.50							0.20	1.29	1.83	2.25
		6100	6.42	7.79	9.12	12.07	14.90	16.26	17.65	19.15	20.35							0.20	1.31	1.86	2.28
		6200	6.41	7.79	9.12	12.08	14.89	16.24	17.60	19.06	20.21							0.21	1.33	1.89	2.32
		6300	6.40	7.79	9.12	12.07	14.88	16.20	17.53	18.94	20.03							0.21	1.36	1.92	2.36
	30	6400	6.37	7.78	9.11	12.06	14.84	16.15	17.46	18.80	19.84							0.21	1.38	1.96	2.40
		6500	6.36	7.75	9.10	12.05	14.81	16.08	17.36	18.66	19.61							0.22	1.40	1.99	2.43
		6600	6.32	7.73	9.07	12.01	14.75	16.01	17.24	18.49								0.22	1.42	2.02	2.47
		6700	6.30	7.70	9.05	11.98	14.69	15.91	17.12	18.30								0.22	1.44	2.05	2.51
		6800	6.26	7.67	9.01	11.94	14.60	15.82	16.98	18.10								0.23	1.46	2.08	2.55
		6900	6.22	7.63	8.98	11.88	14.52	15.70	16.82	17.87								0.23	1.49	2.11	2.58
		7000	6.17	7.58	8.93	11.82	14.42	15.56	16.64	17.63								0.23	1.51	2.14	2.62
			35	40																	v [m/s]
Dynamically balanced (for details see DIN 2211)																					Pulleys

$v_{max} \leq 55$ m/s

v > 42 m/s.
Please consult our Application Engineering Department.

optibelt

 © ARNTZ OPTIBELT GROUP, GERMANY

POWER RATINGS

optibelt RED POWER 3 PROFILE SPB, 5V/15N, 5V/15J

NOMINAL POWER RATING P_N [kW]

FOR β = 180° AND L_d = 3550 mm

Table 34

Pulleys	v [m/s]	n_k [min⁻¹]	Datum diameter of small pulley d_{dk} [mm] 140	150	160	180	200	224	250	280	315	335	355	375	400	Additional power [kW] per belt for speed ratio i 1.01 to 1.05	1.06 to 1.26	1.27 to 1.57	> 1.57
Statically balanced		**700**	4.82	5.57	6.32	7.80	9.28	11.02	12.89	15.02	17.48	18.88	20.26	21.62	23.33	0.05	0.33	0.47	0.58
		950	6.23	7.22	8.21	10.18	12.11	14.41	16.86	19.66	22.86	24.66	26.45	28.21	30.38	0.07	0.45	0.64	0.78
		1450	8.80	10.26	11.70	14.54	17.35	20.65	24.16	28.09	32.54	35.02	37.43	39.79	42.65	0.11	0.69	0.97	1.20
		2850	14.53	17.05	19.54	24.35	28.93	34.12	39.34	44.76	50.24	52.93	55.26			0.21	1.35	1.92	2.35
		100	0.89	1.01	1.13	1.37	1.61	1.90	2.21	2.56	2.96	3.20	3.43	3.66	3.95	0.01	0.05	0.07	0.08
		200	1.63	1.87	2.10	2.57	3.02	3.58	4.16	4.84	5.62	6.06	6.50	6.95	7.49	0.01	0.09	0.13	0.16
		300	2.33	2.68	3.01	3.68	4.36	5.16	6.02	7.01	8.14	8.78	9.43	10.07	10.87	0.02	0.14	0.20	0.25
		400	2.99	3.43	3.88	4.76	5.64	6.68	7.81	9.10	10.57	11.42	12.25	13.09	14.12	0.03	0.19	0.27	0.33
		500	3.62	4.16	4.72	5.81	6.89	8.17	9.55	11.12	12.94	13.97	15.00	16.02	17.28	0.04	0.24	0.34	0.41
	5	600	4.22	4.88	5.53	6.82	8.09	9.61	11.24	13.10	15.24	16.46	17.66	18.86	20.35	0.04	0.28	0.40	0.49
		700	4.82	5.57	6.32	7.80	9.28	11.02	12.89	15.02	17.48	18.88	20.26	21.62	23.33	0.05	0.33	0.47	0.58
		800	5.40	6.24	7.09	8.76	10.43	12.40	14.51	16.91	19.68	21.24	22.79	24.32	26.22	0.06	0.38	0.54	0.66
		900	5.95	6.90	7.84	9.71	11.56	13.74	16.09	18.76	21.82	23.53	25.25	26.93	29.02	0.07	0.43	0.61	0.74
		1000	6.50	7.54	8.58	10.63	12.66	15.06	17.63	20.56	23.89	25.78	27.62	29.46	31.72	0.07	0.47	0.67	0.82
		1100	7.03	8.17	9.30	11.53	13.74	16.36	19.14	22.31	25.92	27.95	29.94	31.91	34.33	0.08	0.52	0.74	0.91
		1200	7.55	8.78	10.00	12.42	14.80	17.62	20.62	24.01	27.89	30.05	32.18	34.27	36.84	0.09	0.57	0.81	0.99
		1300	8.06	9.38	10.69	13.28	15.84	18.85	22.06	25.68	29.80	32.09	34.34	36.55	39.25	0.10	0.62	0.87	1.07
	10	1400	8.56	9.97	11.36	14.14	16.85	20.06	23.47	27.30	31.64	34.06	36.42	38.74	41.54	0.10	0.66	0.94	1.15
		1500	9.05	10.54	12.02	14.96	17.84	21.24	24.84	28.87	33.43	35.95	38.42	40.82	43.73	0.11	0.71	1.01	1.24
		1600	9.52	11.10	12.67	15.77	18.82	22.39	26.17	30.41	35.16	37.78	40.33	42.80	45.79	0.12	0.76	1.08	1.32
		1700	9.98	11.65	13.31	16.57	19.76	23.52	27.47	31.88	36.82	39.52	42.14	44.69	47.74	0.12	0.81	1.14	1.40
		1800	10.43	12.19	13.92	17.34	20.69	24.61	28.73	33.31	38.40	41.18	43.87	46.45	49.54	0.13	0.85	1.21	1.48
		1900	10.87	12.71	14.53	18.11	21.60	25.67	29.95	34.68	39.91	42.77	45.49	48.12	51.22	0.14	0.90	1.28	1.57
	15	2000	11.30	13.22	15.12	18.84	22.48	26.70	31.13	36.00	41.36	44.26	47.02	49.66	52.74	0.15	0.95	1.34	1.65
		2100	11.72	13.73	15.70	19.56	23.33	27.71	32.26	37.26	42.72	45.66	48.44	51.06	54.12	0.15	0.99	1.41	1.73
		2200	12.13	14.21	16.26	20.27	24.16	28.68	33.36	38.47	44.02	46.97	49.74	52.36	55.36	0.16	1.04	1.48	1.81
		2300	12.53	14.69	16.80	20.95	24.97	29.60	34.40	39.61	45.22	48.17	50.94	53.51	56.41	0.17	1.09	1.55	1.90
		2400	12.92	15.14	17.34	21.61	25.75	30.52	35.41	40.70	46.33	49.28	52.01	54.52	57.31	0.18	1.14	1.61	1.98
		2500	13.30	15.59	17.86	22.26	26.51	31.38	36.37	41.72	47.36	50.28	52.97	55.39	58.04	0.18	1.18	1.68	2.06
		2600	13.67	16.03	18.35	22.88	27.23	32.21	37.27	42.67	48.31	51.18	53.78	56.11	58.60	0.19	1.23	1.75	2.14
	20	2700	14.02	16.45	18.84	23.48	27.94	33.00	38.14	43.56	49.15	51.97	54.48	56.68		0.20	1.28	1.82	2.23
		2800	14.36	16.86	19.31	24.06	28.61	33.76	38.94	44.38	49.91	52.63	55.03	57.08		0.21	1.33	1.88	2.31
		2900	14.69	17.26	19.76	24.62	29.24	34.48	39.71	45.13	50.56	53.18	55.45			0.21	1.37	1.95	2.39
		3000	15.01	17.63	20.20	25.15	29.86	35.15	40.40	45.80	51.11	53.62				0.22	1.42	2.02	2.47
		3100	15.31	18.00	20.62	25.67	30.44	35.78	41.05	46.40	51.55	53.92				0.23	1.47	2.08	2.56
		3200	15.61	18.35	21.02	26.16	31.00	36.38	41.65	46.92	51.89					0.23	1.52	2.15	2.64
		3300	15.89	18.68	21.41	26.63	31.52	36.94	42.18	47.36	52.10					0.24	1.56	2.22	2.72
	25	3400	16.16	19.01	21.78	27.07	32.02	37.44	42.66	47.72						0.25	1.61	2.29	2.80
		3500	16.42	19.32	22.13	27.49	32.47	37.91	43.07	48.00						0.26	1.66	2.35	2.89
		3600	16.67	19.61	22.46	27.89	32.90	38.33	43.43	48.18						0.26	1.71	2.42	2.97
		3700	16.90	19.88	22.78	28.25	33.29	38.70	43.72	48.29						0.27	1.75	2.49	3.05
		3800	17.11	20.15	23.08	28.60	33.65	39.02	43.93							0.28	1.80	2.55	3.13
		3900	17.32	20.39	23.35	28.91	33.96	39.30	44.09							0.29	1.85	2.62	3.21
	30	4000	17.51	20.62	23.60	29.20	34.25	39.53	44.17							0.29	1.89	2.69	3.30
		4100	17.69	20.82	23.84	29.46	34.50	39.70	44.20							0.30	1.94	2.76	3.38
		4200	17.84	21.02	24.06	29.69	34.70	39.82	44.15							0.31	1.99	2.82	3.46
		4300	18.00	21.19	24.25	29.89	34.87	39.89								0.32	2.04	2.89	3.54
		4400	18.13	21.35	24.42	30.07	35.00	39.90								0.32	2.08	2.96	3.63
		4500	18.24	21.49	24.58	30.22	35.10	39.86								0.33	2.13	3.03	3.71
		4600	18.35	21.61	24.71	30.34	35.15	39.77								0.34	2.18	3.09	3.79
	35	4700	18.43	21.72	24.82	30.42	35.16									0.34	2.23	3.16	3.87
		4800	18.50	21.80	24.90	30.47	35.12									0.35	2.27	3.23	3.96
		4900	18.56	21.86	24.96	30.49	35.05									0.36	2.32	3.29	4.04
		5000	18.60	21.91	25.01	30.48	34.93									0.37	2.37	3.36	4.12
		5100	18.62	21.94	25.02	30.43	34.76									0.37	2.42	3.43	4.20
		5200	18.64	21.95	25.01	30.36	34.56									0.38	2.46	3.50	4.29
		5300	18.62	21.94	24.98	30.24										0.39	2.51	3.56	4.37
	40	5400	18.60	21.90	24.92	30.10										0.40	2.56	3.63	4.45
		5500	18.55	21.84	24.84	29.92										0.40	2.61	3.70	4.53
													$v_{max} \leq 55$ m/s						
													v > 42 m/s. Please consult our Application Engineering Department.						
																			v [m/s]
Dynamically balanced (for details see DIN 2211)																			Pulleys

Note: Pulley diameters shown are outside diameters for sections 5V/15N, 5V/15J.

POWER RATINGS

optibelt RED POWER 3 PROFILE SPC
NOMINAL POWER RATING P_N [kW]
FOR β = 180° AND L_d = 5600 mm

Table 35

Pulleys	v [m/s]	n_k [min⁻¹]	Datum diameter of small pulley d_{dk} [mm] 224	250	280	315	335	355	375	400	450	500	560	630	710	Additional power [kW] per belt for speed ratio i 1.01 to 1.05	1.06 to 1.26	1.27 to 1.57	> 1.57
Statically balanced		**700**	13.31	16.61	20.38	24.71	27.17	29.59	32.00	34.99	40.87	46.63	53.38	61.01	69.38	0.14	0.90	1.28	1.57
		950	17.08	21.41	26.33	31.97	35.14	38.28	41.38	45.19	52.66	59.86	68.16	77.33	87.06	0.19	1.22	1.73	2.13
		1450	23.68	29.83	36.76	44.57	48.90	53.14	57.26	62.28	71.77	80.51	89.90	99.23	107.51	0.29	1.86	2.65	3.25
		2850	34.84	43.91	53.33	62.76	67.33	71.27								0.57	3.67	5.20	6.38
		50	1.34	1.62	1.96	2.33	2.54	2.76	2.96	3.23	3.76	4.28	4.91	5.63	6.44	0.01	0.06	0.09	0.11
		100	2.48	3.02	3.65	4.37	4.78	5.18	5.59	6.11	7.12	8.11	9.30	10.68	12.24	0.02	0.13	0.18	0.22
		150	3.55	4.34	5.26	6.31	6.90	7.50	8.10	8.83	10.31	11.76	13.50	15.52	17.78	0.04	0.26	0.37	0.45
		200	4.56	5.60	6.79	8.17	8.95	9.73	10.51	11.47	13.39	15.30	17.57	20.18	23.15	0.06	0.39	0.55	0.67
		250	5.53	6.82	8.28	9.98	10.94	11.90	12.85	14.05	16.40	18.74	21.53	24.73	28.36	0.07	0.45	0.64	0.78
		300	6.48	8.00	9.73	11.75	12.89	14.02	15.16	16.56	19.34	22.10	25.38	29.17	33.43	0.08	0.51	0.73	0.90
		350	7.40	9.16	11.16	13.48	14.78	16.09	17.40	19.01	22.22	25.39	29.16	33.50	38.38	0.09	0.58	0.82	1.01
	5	400	8.30	10.28	12.54	15.17	16.64	18.12	19.60	21.42	25.04	28.62	32.86	37.73	43.20	0.10	0.64	0.91	1.12
		450	9.18	11.39	13.91	16.82	18.48	20.12	21.76	23.78	27.80	31.78	36.48	41.87	47.90	0.11	0.71	1.00	1.23
		500	10.03	12.47	15.25	18.46	20.27	22.08	23.88	26.11	30.53	34.87	40.01	45.90	52.46	0.12	0.77	1.10	1.34
		550	10.87	13.54	16.56	20.06	22.04	24.01	25.97	28.39	33.19	37.91	43.48	49.84	56.90	0.13	0.84	1.19	1.45
		600	11.70	14.58	17.86	21.64	23.77	25.90	28.01	30.64	35.80	40.88	46.86	53.66	61.21	0.14	0.90	1.28	1.57
		650	12.52	15.60	19.13	23.18	25.49	27.77	30.02	32.83	38.36	43.79	50.16	57.38	65.38	0.15	0.96	1.37	1.68
		700	13.31	16.61	20.38	24.71	27.17	29.59	32.00	34.99	40.87	46.63	53.38	61.01	69.38	0.16	1.03	1.46	1.79
		750	14.09	17.60	21.60	26.21	28.81	31.39	33.95	37.12	43.33	49.42	56.51	64.51	73.25	0.17	1.09	1.55	1.90
		800	14.86	18.58	22.81	27.68	30.43	33.16	35.86	39.19	45.74	52.13	59.56	67.90	76.96	0.18	1.16	1.64	2.01
		850	15.61	19.54	24.01	29.14	32.03	34.90	37.73	41.23	48.11	54.78	62.52	71.16	80.50	0.19	1.22	1.73	2.13
	10	900	16.36	20.48	25.18	30.56	33.60	36.60	39.58	43.24	50.40	57.36	65.39	74.30	83.87	0.20	1.29	1.83	2.24
		950	17.08	21.41	26.33	31.97	35.14	38.28	41.38	45.19	52.66	59.86	68.16	77.33	87.06	0.21	1.35	1.92	2.35
		1000	17.80	22.32	27.46	33.35	36.65	39.91	43.14	47.11	54.84	62.29	70.84	80.20	90.00	0.22	1.41	2.01	2.46
		1050	18.49	23.22	28.57	34.69	38.14	41.52	44.87	48.98	56.98	64.66	73.40	82.94	92.88	0.23	1.48	2.10	2.57
		1100	19.19	24.10	29.66	36.02	39.59	43.10	46.56	50.81	59.05	66.92	75.86	85.54	95.48	0.24	1.54	2.19	2.69
		1150	19.87	24.97	30.74	37.32	41.00	44.64	48.22	52.60	61.07	69.13	78.23	87.98	97.88	0.25	1.61	2.28	2.80
		1200	20.53	25.81	31.79	38.60	42.41	46.14	49.82	54.32	63.01	71.24	80.47	90.28	100.08	0.26	1.67	2.37	2.91
	15	1250	21.18	26.65	32.83	39.85	43.76	47.62	51.40	56.02	64.90	73.27	82.61	92.41	102.04	0.27	1.74	2.46	3.02
		1300	21.83	27.47	33.84	41.06	45.10	49.06	52.93	57.66	66.72	75.23	84.62	94.37	103.78	0.28	1.80	2.56	3.13
		1350	22.45	28.27	34.84	42.26	46.40	50.45	54.42	59.24	68.47	77.08	86.51	96.17	105.26	0.29	1.86	2.65	3.25
		1400	23.06	29.06	35.81	43.43	47.66	51.82	55.86	60.79	70.16	78.84	88.27	97.79	106.51	0.30	1.93	2.74	3.36
		1450	23.68	29.83	36.76	44.57	48.90	53.14	57.26	62.28	71.77	80.51	89.90	99.23	107.51	0.31	1.99	2.83	3.47
		1500	24.26	30.59	37.68	45.68	50.10	54.42	58.62	63.71	73.31	82.08	91.40	100.49		0.32	2.06	2.92	3.58
		1550	24.84	31.32	38.59	46.76	51.28	55.67	59.94	65.10	74.77	83.54	92.77	101.54		0.33	2.12	3.01	3.69
		1600	25.40	32.05	39.48	47.81	52.40	56.87	61.20	66.42	76.16	84.92	94.00	102.41		0.34	2.19	3.10	3.80
		1650	25.96	32.75	40.34	48.84	53.51	58.03	62.42	67.69	77.47	86.18	95.06	103.08		0.35	2.25	3.19	3.92
	20	1700	26.50	33.43	41.18	49.82	54.56	59.16	63.59	68.90	78.71	87.34	96.00			0.36	2.31	3.29	4.03
		1750	27.01	34.10	42.00	50.78	55.60	60.24	64.72	70.06	79.85	88.38	96.77			0.37	2.38	3.38	4.14
		1800	27.53	34.76	42.79	51.71	56.58	61.27	65.78	71.15	80.92	89.32	97.39			0.38	2.44	3.47	4.25
		1850	28.02	35.40	43.56	52.61	57.53	62.27	66.79	72.17	81.90	90.13	97.85			0.39	2.51	3.56	4.36
		1900	28.51	36.01	44.30	53.47	58.44	63.20	67.76	73.14	82.79	90.83				0.40	2.57	3.65	4.48
		1950	28.98	36.61	45.02	54.30	59.32	64.10	68.68	74.04	83.58	91.40				0.41	2.64	3.74	4.59
		2000	29.44	37.19	45.73	55.09	60.14	64.96	69.53	74.88	84.29	91.85				0.42	2.70	3.83	4.70
		2050	29.88	37.75	46.39	55.86	60.94	65.76	70.32	75.65	84.90	92.17				0.43	2.77	3.92	4.81
	25	2100	30.30	38.29	47.04	56.58	61.68	66.52	71.06	76.34	85.43	92.38				0.44	2.83	4.02	4.92
		2150	30.72	38.81	47.66	57.26	62.39	67.21	71.75	76.97	85.85					0.45	2.89	4.11	5.04
		2200	31.12	39.31	48.25	57.92	63.05	67.87	72.37	77.53	86.16					0.46	2.96	4.20	5.15
		2250	31.50	39.79	48.82	58.54	63.66	68.47	72.94	78.01	86.38					0.47	3.02	4.29	5.26
		2300	31.86	40.26	49.36	59.11	64.24	69.02	73.44	78.43	86.50					0.48	3.09	4.38	5.37
		2350	32.21	40.70	49.87	59.65	64.76	69.52	73.87	78.76						0.49	3.15	4.47	5.48
		2400	32.54	41.12	50.35	60.14	65.24	69.95	74.24	79.02						0.50	3.22	4.56	5.60
		2450	32.87	41.52	50.80	60.61	65.68	70.33	74.56	79.20						0.51	3.28	4.66	5.71
		2500	33.17	41.89	51.23	61.02	66.06	70.66	74.80	79.30						0.52	3.34	4.75	5.82
	30	2550	33.46	42.25	51.61	61.40	66.40	70.93	74.98	79.32						0.53	3.41	4.84	5.93
		2600	33.73	42.59	51.98	61.74	66.68	71.14	75.08	79.26						0.54	3.47	4.93	6.04
		2650	33.98	42.90	52.31	62.03	66.91	71.29	75.12							0.55	3.54	5.02	6.16
		2700	34.22	43.19	52.62	62.28	67.10	71.38	75.08							0.56	3.60	5.11	6.27
		2750	34.44	43.45	52.88	62.48	67.24	71.40	74.98							0.57	3.67	5.20	6.38
		2800	34.64	43.69	53.12	62.64	67.31	71.36	74.80							0.58	3.73	5.29	6.49
		2850	34.84	43.91	53.33	62.76	67.33	71.27								0.59	3.79	5.39	6.60
		2900	35.00	44.10	53.51	62.83	67.30	71.11								0.60	3.86	5.48	6.71
	35	2950	35.15	44.28	53.64	62.86	67.21	70.88								0.61	3.92	5.57	6.83
		3000	35.28	44.42	53.75	62.83	67.07									0.62	3.99	5.66	6.94
		3050	35.40	44.54	53.82	62.76	66.88									0.63	4.05	5.75	7.05
		3100	35.50	44.64	53.86	62.64	66.61									0.64	4.12	5.84	7.16
		3150	35.57	44.70	53.86	62.46										0.65	4.18	5.93	7.27
		3200	35.63	44.75	53.82	62.24										0.66	4.24	6.02	7.39
		3250	35.66	44.77	53.75	61.97										0.67	4.31	6.12	7.50
		3300	35.68	44.76	53.64	61.66										0.68	4.37	6.21	7.61
		3350	35.68	44.72	53.50											0.69	4.44	6.30	7.72
	40	3400	35.65	44.65	53.32											0.70	4.50	6.39	7.83
		3450	35.62	44.57	53.10														
		3500	35.56	44.45	52.84														

$v_{max} \leq 55$ m/s

v > 42 m/s.
Please consult our Application Engineering Department.

v [m/s]

Dynamically balanced (for details see DIN 2211)

Pulleys

 © ARNTZ OPTIBELT GROUP, GERMANY

POWER RATINGS

optibelt RED POWER 3 PROFILE 8V/25N, 8V/25J

NOMINAL POWER RATING P_N [kW]

FOR β = 180° AND 8V 2500/6350 mm L_a

Table 36

Pulleys	v [m/s]	n_k [min⁻¹]	Outside diameter of small pulley d_{ok} [mm] 335	355	375	425	450	475	500	530	560	600	630	710	800	Additional power [kW] per belt for speed ratio i 1.01 to 1.05	1.06 to 1.26	1.27 to 1.57	> 1.57
Statically balanced		**700**	33.85	37.57	41.26	50.27	54.67	59.00	63.26	68.28	73.18	79.54	84.17	95.89	107.94	0.28	1.83	2.60	3.18
		950	42.72	47.41	52.01	63.12	68.45	73.63	78.65	84.44	89.99	96.97	101.89	113.58	124.01	0.38	2.48	3.52	4.32
		1450	55.34	61.15	66.68	79.30	84.90	90.01	94.58	99.36	103.31	107.21	109.06			0.59	3.79	5.38	6.60
		50	3.36	3.70	4.03	4.85	5.27	5.68	6.08	6.56	7.06	7.70	8.18	9.46	10.88	0.02	0.13	0.19	0.23
		100	6.28	6.91	7.55	9.12	9.91	10.69	11.47	12.41	13.33	14.57	15.49	17.94	20.66	0.04	0.26	0.37	0.45
		150	9.00	9.94	10.86	13.18	14.32	15.46	16.60	17.95	19.31	21.11	22.45	26.00	29.95	0.06	0.39	0.56	0.68
		200	11.62	12.83	14.04	17.06	18.55	20.04	21.53	23.30	25.07	27.40	29.15	33.76	38.88	0.08	0.52	0.74	0.91
		250	14.14	15.64	17.12	20.82	22.66	24.48	26.30	28.48	30.64	33.49	35.62	41.24	47.47	0.10	0.65	0.93	1.14
	5	300	16.57	18.35	20.11	24.48	26.64	28.80	30.94	33.49	36.02	39.38	41.88	48.47	55.73	0.12	0.78	1.11	1.36
		350	18.95	20.99	23.00	28.03	30.52	32.99	35.44	38.36	41.27	45.10	47.95	55.43	63.65	0.14	0.91	1.30	1.59
		400	21.25	23.56	25.84	31.49	34.28	37.06	39.82	43.09	46.34	50.63	53.81	62.12	71.22	0.16	1.05	1.48	1.82
		450	23.50	26.05	28.58	34.85	37.94	41.02	44.06	47.68	51.25	55.97	59.45	68.54	78.42	0.18	1.18	1.67	2.05
		500	25.68	28.49	31.26	38.12	41.51	44.86	48.17	52.12	55.99	61.10	64.87	74.68	85.22	0.20	1.31	1.86	2.27
		550	27.82	30.85	33.88	41.30	44.96	48.58	52.15	56.39	60.58	66.05	70.07	80.48	91.61	0.22	1.44	2.04	2.50
	10	600	29.88	33.16	36.41	44.39	48.31	52.18	56.00	60.52	64.97	70.76	75.02	85.98	97.54	0.24	1.57	2.23	2.73
		650	31.90	35.40	38.87	47.38	51.55	55.66	59.71	64.49	69.17	75.28	79.73	91.12	103.00	0.26	1.70	2.41	2.96
		700	33.85	37.57	41.26	50.27	54.67	59.00	63.26	68.28	73.18	79.54	84.17	95.89	107.94	0.28	1.83	2.60	3.18
		750	35.75	39.68	43.56	53.05	57.67	62.22	66.67	71.89	76.99	83.57	88.33	100.28	112.34	0.30	1.96	2.78	3.41
		800	37.58	41.72	45.79	55.74	60.56	65.29	69.91	75.32	80.58	87.34	92.20	104.27	116.20	0.32	2.09	2.97	3.64
	15	850	39.36	43.69	47.95	58.31	63.32	68.22	73.00	78.56	83.95	90.83	95.75	107.83	119.44	0.34	2.22	3.15	3.87
		900	41.08	45.59	50.03	60.77	65.95	71.00	75.91	81.61	87.10	94.04	98.99	110.94	122.05	0.36	2.35	3.34	4.09
		950	42.72	47.41	52.01	63.12	68.45	73.63	78.65	84.44	89.99	96.97	101.89	113.58	124.01	0.38	2.48	3.52	4.32
		1000	44.30	49.16	53.92	65.35	70.81	76.09	81.19	87.06	92.63	99.59	104.45	115.72	125.27	0.40	2.61	3.71	4.55
		1050	45.83	50.83	55.73	67.45	73.02	78.38	83.54	89.45	95.02	101.89	106.63	117.35	125.80	0.42	2.74	3.90	4.78
	20	1100	47.28	52.43	57.44	69.42	75.08	80.52	85.70	91.60	97.12	103.86	108.43	118.44	125.57	0.44	2.88	4.08	5.00
		1150	48.66	53.94	59.08	71.27	76.99	82.46	87.65	93.52	98.94	105.48	109.84	118.97		0.46	3.01	4.27	5.23
		1200	49.97	55.37	60.60	72.97	78.74	84.22	89.39	95.17	100.46	106.74	110.83	118.92		0.49	3.14	4.45	5.46
		1250	51.19	56.70	62.03	74.54	80.33	85.79	90.90	96.56	101.69	107.64	111.40	118.26		0.51	3.27	4.64	5.69
		1300	52.36	57.96	63.36	75.96	81.74	87.16	92.18	97.69	102.60	108.14	111.52			0.53	3.40	4.82	5.91
		1350	53.44	59.11	64.58	77.23	82.98	88.32	93.24	98.54	103.18	108.24	111.17			0.55	3.53	5.01	6.14
	25	1400	54.43	60.18	65.69	78.35	84.04	89.27	94.03	99.10	103.42					0.57	3.66	5.19	6.37
		1450	55.34	61.15	66.68	79.30	84.90	90.01	94.58	99.36	103.31					0.59	3.79	5.38	6.60
		1500	56.18	62.02	67.57	80.09	85.58	90.52	94.88	99.31	102.84					0.61	3.92	5.57	6.82
		1550	56.93	62.78	68.34	80.71	86.06	90.79	94.91							0.63	4.05	5.75	7.05
		1600	57.58	63.46	68.98	81.17	86.34	90.84	94.64							0.65	4.18	5.94	7.28
		1650	58.15	64.01	69.49	81.44	86.40	90.64	94.12							0.67	4.31	6.12	7.51
	30	1700	58.62	64.46	69.89	81.54	86.26	90.18	93.29							0.69	4.44	6.31	7.73
		1750	58.99	64.80	70.15	81.43	85.88	89.47	92.16							0.71	4.57	6.49	7.96
		1800	59.28	65.02	70.27	81.14	85.28									0.73	4.70	6.68	8.19
		1850	59.45	65.12	70.26	80.66	84.46									0.75	4.84	6.86	8.42
		1900	59.53	65.10	70.10	79.98	83.39									0.77	4.97	7.05	8.64
	35	1950	59.51	64.96	69.82	79.08	82.08									0.79	5.10	7.23	8.87
		2000	59.36	64.69	69.37	77.98	80.52									0.81	5.23	7.42	9.10
		2050	59.12	64.30	68.77											0.83	5.36	7.61	9.33
		2100	58.78	63.77	68.03											0.85	5.49	7.79	9.55
		2150	58.31	63.11	67.12											0.87	5.62	7.98	9.78
		2200	57.72	62.32	66.05											0.89	5.75	8.16	10.01
		2250	57.01	61.38	64.82											0.91	5.88	8.35	10.23
															$v_{max} \leq 55$ m/s				
															v > 42 m/s. Please consult our Application Engineering Department.				
	40																		v [m/s]
Dynamically balanced (for details see ARPM/MPTA)																			Pulleys

Redacted

POWER RATINGS

optibelt BLUE POWER PROFILE SPB

NOMINAL POWER RATING P_N [kW]

FOR β = 180° AND L_w = 3550 mm

Table 37

Pulleys	v [m/s]	n_k [min⁻¹]	Pitch diameter of small pulley d_{wk} [mm] 180	190	200	212	224	236	250	280	315	355	375	400	Additional power [kW] per belt for speed ratio i 1.01 to 1.05	1.06 to 1.26	1.27 to 1.57	> 1.57
Dynamically balanced		**700**	8.72	9.93	11.12	12.54	13.97	15.39	17.04	20.54	24.57	29.09	31.33	34.09	0.09	0.60	0.85	1.04
		950	11.48	13.08	14.66	16.55	18.42	20.29	22.46	27.01	32.21	38.00	40.81	44.25	0.13	0.81	1.16	1.42
		1450	16.46	18.76	21.03	23.72	26.36	28.98	31.96	38.16	45.01	52.26	55.64	59.61	0.19	1.24	1.76	2.16
		2850	24.74	28.07	31.23	34.79	38.07	41.06	44.17	49.35	52.57	0.00	0.00	0.00	0.38	2.44	3.47	4.25
		100	1.40	1.58	1.76	1.97	2.20	2.41	2.67	3.21	3.84	4.56	4.91	5.36	0.01	0.09	0.12	0.15
		200	2.70	3.05	3.42	3.85	4.27	4.70	5.19	6.26	7.50	8.92	9.62	10.50	0.03	0.17	0.24	0.30
		300	3.96	4.49	5.03	5.66	6.29	6.93	7.67	9.24	11.07	13.16	14.20	15.48	0.04	0.26	0.36	0.45
		400	5.19	5.89	6.59	7.43	8.27	9.11	10.08	12.17	14.57	17.30	18.68	20.36	0.05	0.34	0.49	0.60
	5	500	6.38	7.27	8.13	9.17	10.21	11.24	12.45	15.02	17.99	21.35	23.03	25.10	0.07	0.43	0.61	0.75
		600	7.57	8.61	9.63	10.88	12.11	13.34	14.77	17.81	21.32	25.28	27.24	29.68	0.08	0.51	0.73	0.89
		700	8.72	9.93	11.12	12.54	13.97	15.39	17.04	20.54	24.57	29.09	31.33	34.09	0.09	0.60	0.85	1.04
		800	9.84	11.20	12.56	14.18	15.79	17.39	19.25	23.18	27.71	32.77	35.25	38.32	0.11	0.69	0.97	1.19
		900	10.95	12.46	13.97	15.76	17.56	19.33	21.39	25.76	30.74	36.29	39.00	42.32	0.12	0.77	1.09	1.34
	10	1000	12.01	13.69	15.34	17.32	19.28	21.24	23.49	28.24	33.66	39.65	42.56	46.10	0.13	0.86	1.22	1.49
		1100	13.06	14.88	16.67	18.83	20.96	23.07	25.51	30.63	36.44	42.81	45.89	49.63	0.15	0.94	1.34	1.64
		1200	14.07	16.03	17.98	20.29	22.58	24.84	27.45	32.93	39.09	45.79	49.00	52.86	0.16	1.03	1.46	1.79
		1300	15.05	17.15	19.24	21.70	24.14	26.54	29.32	35.11	41.58	48.55	51.86	55.82	0.17	1.11	1.58	1.94
		1400	16.00	18.23	20.44	23.06	25.63	28.18	31.11	37.17	43.90	51.09	54.45	58.44	0.19	1.20	1.70	2.09
	15	1500	16.91	19.28	21.60	24.36	27.08	29.75	32.80	39.12	46.06	53.37	56.76	60.70	0.20	1.28	1.82	2.24
		1600	17.79	20.27	22.71	25.61	28.43	31.22	34.40	40.94	48.03	55.40	58.74	62.59	0.21	1.37	1.95	2.39
		1700	18.62	21.21	23.77	26.78	29.74	32.62	35.90	42.62	50.34	57.15	60.42	64.11	0.23	1.46	2.07	2.53
		1800	19.42	22.12	24.77	27.90	30.95	33.92	37.30	44.14	51.39	58.60	61.74	65.20	0.24	1.54	2.19	2.68
		1900	20.16	22.96	25.72	28.94	32.09	35.14	38.58	45.51	52.75	59.75	62.71	65.84	0.25	1.63	2.31	2.83
		2000	20.87	23.76	26.60	29.92	33.14	36.25	39.75	46.73	53.87	60.58	63.28	66.02	0.26	1.71	2.43	2.98
	20	2100	21.53	24.50	27.41	30.81	34.09	37.25	40.80	47.77	54.75	61.05	63.46	65.73	0.28	1.80	2.55	3.13
		2200	22.13	25.19	28.17	31.63	34.96	38.16	41.72	48.64	55.38	61.17	63.21	64.90	0.29	1.88	2.67	3.28
		2300	22.69	25.82	28.85	32.37	35.73	38.95	42.50	49.31	55.76	60.91	62.52	63.56	0.30	1.97	2.80	3.43
		2400	23.20	26.38	29.46	33.01	36.40	39.62	43.15	49.80	55.85	60.27	61.38	61.66	0.32	2.06	2.92	3.58
		2500	23.65	26.88	30.00	33.57	36.97	40.17	43.64	50.08	55.66	59.21	59.75	59.16	0.33	2.14	3.04	3.73
	25	2600	24.04	27.31	30.45	34.05	37.42	40.60	43.99	50.15	55.17	59.14			0.34	2.23	3.16	3.88
		2700	24.36	27.66	30.83	34.41	37.77	40.88	44.18	49.99	54.36	58.69			0.36	2.31	3.28	4.02
		2800	24.63	27.96	31.12	34.69	38.00	41.03	44.23	49.63	53.24				0.37	2.40	3.40	4.17
		2900	24.84	28.17	31.32	34.86	38.11	41.05	44.09	49.01	51.80				0.38	2.48	3.53	4.32
		3000	24.98	28.31	31.44	34.92	38.09	40.92	43.78	48.17	49.99				0.40	2.57	3.65	4.47
	30	3100	25.05	28.36	31.46	34.87	37.94	40.64	43.29	47.91					0.41	2.66	3.77	4.62
		3200	25.05	28.34	31.39	34.72	37.66	40.19	42.62	47.42					0.42	2.74	3.89	4.77
		3300	24.98	28.22	31.22	34.44	37.24	39.59	41.76	47.13					0.44	2.83	4.01	4.92
		3400	24.84	28.03	30.94	34.03	36.68	38.84	40.70	46.70					0.45	2.91	4.13	5.07
		3500	24.61	27.75	30.56	33.52	35.97	37.90	39.44						0.46	3.00	4.26	5.22
	35	3600	24.30	27.37	30.09	32.87	35.11	37.78	39.42						0.48	3.08	4.38	5.37
		3700	23.93	26.89	29.48	32.09	34.10	37.26	38.74						0.49	3.17	4.50	5.52
		3800	23.46	26.32	28.78	31.18	32.93	36.73	38.06						0.50	3.26	4.62	5.66
		3900	22.92	25.65	27.96	30.13	31.60	36.21							0.52	3.34	4.74	5.81
		4000	22.27	24.88	27.01	28.92	30.10	35.68							0.53	3.43	4.86	5.96
	40	4100	21.56	24.00	25.94	28.62	30.16	35.16							0.54	3.51	4.99	6.11
		4200	20.73	23.02	24.75	27.83	29.29								0.56	3.60	5.11	6.26
		4300	19.82	21.92	23.44	27.05	28.43								0.57	3.68	5.23	6.41
		4400	18.82	20.72	21.99	26.26									0.58	3.77	5.35	6.56
		4500	17.71	19.39	20.41	25.48									0.60	3.85	5.47	6.71
	45	4600	17.22	18.63	19.66										0.61	3.94	5.59	6.86
		4700	16.40	17.59	18.47										0.62	4.02	5.71	7.01
		4800	15.58	16.55											0.64	4.11	5.84	7.15
		4900	14.76	15.51											0.65	4.20	5.96	7.30
		5000	13.93	14.46											0.66	4.28	6.08	7.45
	50	5100	13.11												0.68	4.37	6.20	7.60
		5200	12.29												0.69	4.45	6.32	7.75
		5300	11.47												0.70	4.54	6.44	7.90

v > 50 m/s.
Please consult our Application Engineering Department.

v [m/s]

Dynamically balanced (DIN 2211)

Pulleys

$L_w = L_d$

optibelt POWER TRANSMISSION

POWER RATINGS

optibelt BLUE POWER PROFILE SPC

NOMINAL POWER RATING P_N [kW]

FOR β = 180° AND L_w = 5600 mm

Table 38

Pulleys	v [m/s]	n_k [min⁻¹]	Pitch diameter of small pulley d_{wk} [mm] 280	300	315	335	355	375	400	450	500	560	630	700	Additional power [kW] per belt for speed ratio i 1.01 to 1.05	1.06 to 1.26	1.27 to 1.57	> 1.57
Dynamically balanced		**700**	23.90	28.13	31.28	35.46	39.61	43.72	48.83	58.88	26.73	80.19	93.10	107.16	0.26	1.68	2.38	2.92
		950	31.12	36.65	40.75	46.19	51.53	56.83	63.32	75.98	88.10	101.89	116.82	132.16	0.35	2.27	3.23	3.96
		1450	43.06	50.67	56.25	63.52	70.56	77.36	85.54	100.66	113.99	127.37	138.96	146.27	0.54	3.47	4.93	6.04
		2850	49.11												1.06	6.82	9.68	11.87
		50	2.02	2.34	2.59	2.93	3.25	3.58	3.99	4.82	5.63	6.62	7.76	9.06	0.02	0.12	0.17	0.21
		100	3.89	4.54	5.03	5.68	6.33	6.99	7.78	9.41	11.02	12.95	15.19	17.74	0.04	0.24	0.34	0.42
		150	5.71	6.68	7.41	8.37	9.34	10.30	11.51	13.90	16.30	19.15	22.47	26.25	0.06	0.36	0.51	0.62
		200	7.49	8.78	9.74	11.02	12.29	13.57	15.15	18.33	21.48	25.26	29.62	34.61	0.07	0.48	0.68	0.83
		250	9.25	10.84	12.03	13.62	15.20	16.79	18.76	22.68	26.59	31.26	36.67	42.80	0.09	0.60	0.85	1.04
	5	300	10.98	12.87	14.29	16.18	18.07	19.95	22.30	26.98	31.63	37.17	43.58	50.83	0.11	0.72	1.02	1.25
		350	12.67	14.88	16.52	18.72	20.90	23.09	25.80	31.21	36.58	42.98	50.36	58.69	0.13	0.84	1.19	1.46
		400	14.35	16.86	18.73	21.21	23.70	26.18	29.26	35.38	41.45	48.68	56.99	66.35	0.15	0.96	1.36	1.67
		450	16.00	18.80	20.90	23.67	26.46	29.22	32.66	39.49	46.26	54.26	63.48	73.79	0.17	1.08	1.53	1.87
		500	17.63	20.72	23.03	26.11	29.18	32.21	36.01	43.53	50.95	59.74	69.79	81.00	0.19	1.20	1.70	2.08
		550	19.24	22.61	25.14	28.50	31.85	35.17	39.30	47.49	55.55	65.07	75.92	87.98	0.20	1.32	1.87	2.29
		600	20.82	24.49	27.22	30.86	34.48	38.08	42.55	51.37	60.06	70.27	81.86	94.67	0.22	1.44	2.04	2.50
	10	650	22.37	26.32	29.26	33.18	37.06	40.92	45.72	55.17	64.44	75.31	87.60	101.07	0.24	1.56	2.21	2.71
		700	23.90	28.29	31.28	35.46	39.61	43.72	48.83	58.88	68.73	80.19	93.10	107.16	0.26	1.68	2.38	2.92
		750	25.40	29.89	33.25	37.69	42.10	46.47	51.88	62.51	72.87	84.91	98.38	112.91	0.28	1.80	2.55	3.12
		800	26.87	31.64	35.18	39.89	44.53	49.15	54.85	66.04	76.89	89.46	103.40	118.31	0.30	1.91	2.72	3.33
		850	28.32	33.35	37.09	42.03	46.93	51.77	57.75	69.45	80.78	93.80	108.16	123.33	0.31	2.03	2.89	3.54
		900	29.74	35.01	38.95	44.13	49.27	54.33	60.58	72.77	84.52	97.96	112.63	127.96	0.33	2.15	3.06	3.75
		950	31.12	36.65	40.75	46.19	51.53	56.83	63.32	75.98	88.10	101.89	116.82	132.16	0.35	2.27	3.23	3.96
	15	1000	32.48	38.25	42.53	48.17	53.75	59.25	65.98	79.06	91.53	105.60	120.68	135.93	0.37	2.39	3.40	4.17
		1050	33.80	39.80	44.25	50.12	55.90	61.59	68.56	82.03	94.79	109.09	124.22	139.22	0.39	2.51	3.57	4.37
		1100	35.08	41.33	45.95	52.01	57.99	63.85	71.05	84.87	97.87	112.34	127.41	142.03	0.41	2.63	3.74	4.58
		1150	36.34	42.80	47.57	53.84	60.00	66.05	73.43	87.57	100.79	115.33	130.26	144.34	0.43	2.75	3.91	4.79
		1200	37.56	44.23	49.15	55.62	61.96	68.17	75.71	90.13	103.50	118.06	132.73	146.12	0.44	2.87	4.08	5.00
		1250	38.74	45.61	50.68	57.33	63.83	70.18	77.90	92.54	106.02	120.51	134.82	147.34	0.46	2.99	4.25	5.21
		1300	39.87	46.96	52.16	58.98	65.63	72.11	79.98	94.81	108.35	122.68	136.50	147.99	0.48	3.11	4.42	5.42
	20	1350	40.98	48.24	53.58	60.56	67.35	73.96	81.94	96.92	110.45	124.56	137.76	148.04	0.50	3.23	4.59	5.62
		1400	42.04	49.48	54.95	62.08	68.99	75.71	83.80	98.87	112.34	126.13	138.59	147.48	0.52	3.35	4.76	5.83
		1450	43.06	50.67	56.25	63.52	70.56	77.36	85.54	100.66	113.99	127.37	138.96	146.27	0.54	3.47	4.93	6.04
		1500	44.03	51.81	57.50	64.88	72.03	78.92	87.15	102.27	115.42	128.30	138.88	144.41	0.56	3.59	5.10	6.25
		1550	44.95	52.89	58.67	66.18	73.40	80.36	88.63	103.71	116.61	128.88			0.57	3.71	5.27	6.46
		1600	45.85	53.91	59.79	67.40	74.70	81.70	89.99	104.96	117.53	129.12			0.59	3.83	5.44	6.67
		1650	46.68	54.88	60.84	68.53	75.89	82.92	91.22	106.02	118.20	129.00			0.61	3.95	5.61	6.87
	25	1700	47.46	55.79	61.82	69.58	77.00	84.04	92.32	106.89	118.62	128.49			0.63	4.07	5.78	7.08
		1750	48.20	56.63	62.73	70.55	77.99	85.04	93.25	107.56	118.75	127.62			0.65	4.19	5.95	7.29
		1800	48.89	57.41	63.57	71.44	78.89	85.92	94.05	108.02	118.61				0.67	4.31	6.12	7.50
		1850	49.52	58.14	64.33	72.24	79.69	86.67	94.71	108.28	118.17				0.68	4.43	6.29	7.71
		1900	50.11	58.79	65.03	72.94	80.37	87.30	95.20	108.30	117.45				0.70	4.55	6.46	7.91
		1950	50.84	59.37	65.63	73.56	80.95	87.79	95.55	108.12	116.41				0.72	4.67	6.63	8.12
		2000	51.10	59.89	66.16	74.06	81.41	88.16	95.73	107.70	115.07				0.74	4.79	6.80	8.33
	30	2050	51.51	60.34	66.61	74.48	81.76	88.40	95.75	107.44					0.76	4.91	6.97	8.54
		2100	51.86	60.72	66.98	74.80	81.98	88.48	95.59	107.14					0.78	5.03	7.13	8.75
		2150	52.15	61.01	67.26	75.03	82.08	88.42	95.27	106.84					0.80	5.15	7.30	8.96
		2200	52.37	61.24	67.45	75.12	82.07	88.23	94.77						0.81	5.27	7.47	9.16
		2250	52.54	61.39	67.56	75.14	81.93	87.88	94.08						0.83	5.39	7.64	9.37
		2300	52.64	61.46	67.58	75.03	81.65	87.85	93.84						0.85	5.51	7.81	9.58
	35	2350	52.67	61.45	67.49	74.82	81.24	87.77	93.43						0.87	5.62	7.98	9.79
		2400	52.64	61.35	67.31	74.48	80.70	87.64	93.01						0.89	5.74	8.15	10.00
		2450	52.54	61.17	67.05	74.03	80.02	87.51							0.91	5.86	8.32	10.21
		2500	52.37	60.90	66.67	73.47	79.20	87.38							0.93	5.98	8.49	10.41
		2550	52.12	60.55	66.21	73.33	78.88	87.25							0.94	6.10	8.66	10.62
		2600	51.81	60.12	65.63	73.00	78.34								0.96	6.22	8.83	10.83
		2650	51.42	59.58	64.95	72.66	77.79								0.98	6.34	9.00	11.04
	40	2700	50.96	58.95	64.16	72.33	77.25								1.00	6.46	9.17	11.25
		2750	50.43	58.24	63.27	72.00	76.70								1.02	6.58	9.34	11.46
		2800	49.81	58.11	63.06	71.67	76.16								1.04	6.70	9.51	11.66
		2850	49.11	57.67	62.48	71.33	75.61								1.06	6.82	9.68	11.88
		2900	48.33	57.23	61.90	71.00	75.07								1.07	6.94	9.85	12.08
		2950	47.47	56.79	61.33										1.09	7.06	10.02	12.29
		3000	46.54	56.34	60.75										1.09	7.06	10.02	12.29
	45	3050	46.54	55.90	60.17										1.13	7.27	10.32	12.60
		3100	45.96	55.46											1.14	7.39	10.49	12.79
		3150	45.38	55.01											1.16	7.50	10.65	12.98
		3200	44.80	54.57											1.18	7.62	10.82	13.17
		3250	44.22												1.20	7.74	10.99	13.37
		3300	43.63												1.22	7.85	11.15	13.56
		3350	43.05												1.23	7.97	11.32	13.75
		3400	42.47												1.25	8.09	11.49	13.94
	50	3450	41.89												1.27	8.21	11.65	14.13
																		v [m/s]
			Dynamically balanced (DIN 2211)															Pulleys

v > 50 m/s.
Please consult our Application Engineering Department.

$L_w = L_d$

DRIVE POWER

POWER RATINGS

optibelt BLUE POWER PROFILE 5V

NOMINAL POWER RATING P_N [kW]

FOR β = 180° AND L_w = 3550 mm

Table 39

Pulleys	v [m/s]	n_k [min⁻¹]	Pitch diameter of small pulley d_{wk} [mm] 180	190	200	212	224	236	250	280	315	355	375	400	Additional power [kW] per belt for speed ratio i 1.01 to 1.05	1.06 to 1.26	1.27 to 1.57	> 1.57
Dynamically balanced		**700**	8.72	9.93	11.12	12.54	13.97	15.39	17.04	20.54	24.57	29.09	31.33	34.09	0.09	0.60	0.85	1.04
		950	11.48	13.08	14.66	16.55	18.42	20.29	22.46	27.01	32.21	38.00	40.81	44.25	0.13	0.81	1.16	1.42
		1450	16.46	18.76	21.03	23.72	26.36	28.98	31.96	38.16	45.01	52.26	55.64	59.61	0.19	1.24	1.76	2.16
		2850	24.74	28.07	31.23	34.79	38.07	41.06	44.17	49.35	52.57	0.00	0.00	0.00	0.38	2.44	3.47	4.25
		100	1.40	1.58	1.76	1.97	2.20	2.41	2.67	3.21	3.84	4.56	4.91	5.36	0.01	0.09	0.12	0.15
		200	2.70	3.05	3.42	3.85	4.27	4.70	5.19	6.26	7.50	8.92	9.62	10.50	0.03	0.17	0.24	0.30
		300	3.96	4.49	5.03	5.66	6.29	6.93	7.67	9.24	11.07	13.16	14.20	15.48	0.04	0.26	0.36	0.45
		400	5.19	5.89	6.59	7.43	8.27	9.11	10.08	12.17	14.57	17.30	18.68	20.36	0.05	0.34	0.49	0.60
		500	6.38	7.27	8.13	9.17	10.21	11.24	12.45	15.02	17.99	21.35	23.03	25.10	0.07	0.43	0.61	0.75
	5	600	7.57	8.61	9.63	10.88	12.11	13.34	14.77	17.81	21.32	25.28	27.24	29.68	0.08	0.51	0.73	0.89
		700	8.72	9.93	11.12	12.54	13.97	15.39	17.04	20.54	24.57	29.09	31.33	34.09	0.09	0.60	0.85	1.04
		800	9.84	11.20	12.56	14.18	15.79	17.39	19.25	23.18	27.71	32.77	35.25	38.32	0.11	0.69	0.97	1.19
		900	10.95	12.46	13.97	15.76	17.56	19.33	21.39	25.76	30.74	36.29	39.00	42.32	0.12	0.77	1.09	1.34
		1000	12.01	13.69	15.34	17.32	19.28	21.24	23.49	28.24	33.66	39.65	42.56	46.10	0.13	0.86	1.22	1.49
	10	1100	13.06	14.88	16.67	18.83	20.96	23.07	25.51	30.63	36.44	42.81	45.89	49.63	0.15	0.94	1.34	1.64
		1200	14.07	16.03	17.98	20.29	22.58	24.84	27.45	32.93	39.09	45.79	49.00	52.86	0.16	1.03	1.46	1.79
		1300	15.05	17.15	19.24	21.70	24.14	26.54	29.32	35.11	41.58	48.55	51.86	55.82	0.17	1.11	1.58	1.94
		1400	16.00	18.23	20.44	23.06	25.63	28.18	31.11	37.17	43.90	51.09	54.45	58.44	0.19	1.20	1.70	2.09
		1500	16.91	19.28	21.60	24.36	27.08	29.75	32.80	39.12	46.06	53.37	56.76	60.70	0.20	1.28	1.82	2.24
	15	1600	17.79	20.27	22.71	25.61	28.43	31.22	34.40	40.94	48.03	55.40	58.74	62.59	0.21	1.37	1.95	2.39
		1700	18.62	21.21	23.77	26.78	29.74	32.62	35.90	42.62	50.34	57.15	60.42	64.11	0.23	1.46	2.07	2.53
		1800	19.42	22.12	24.77	27.90	30.95	33.92	37.30	44.14	51.39	58.60	61.74	65.20	0.24	1.54	2.19	2.68
		1900	20.16	22.96	25.72	28.94	32.09	35.14	38.58	45.51	52.75	59.75	62.71	65.84	0.25	1.63	2.31	2.83
		2000	20.87	23.76	26.60	29.92	33.14	36.25	39.75	46.73	53.87	60.58	63.28	66.02	0.26	1.71	2.43	2.98
	20	2100	21.53	24.50	27.41	30.81	34.09	37.25	40.80	47.77	54.75	61.05	63.46	65.73	0.28	1.80	2.55	3.13
		2200	22.13	25.19	28.17	31.63	34.96	38.16	41.72	48.64	55.38	61.17	63.21	64.90	0.29	1.88	2.67	3.28
		2300	22.69	25.82	28.85	32.37	35.73	38.95	42.50	49.31	55.76	60.91	62.52	63.56	0.30	1.97	2.80	3.43
		2400	23.20	26.38	29.46	33.01	36.40	39.62	43.15	49.80	55.85	60.27	61.38	61.66	0.32	2.06	2.92	3.58
		2500	23.65	26.88	30.00	33.57	36.97	40.17	43.64	50.08	55.66	59.21	59.75	59.16	0.33	2.14	3.04	3.73
	25	2600	24.04	27.31	30.45	34.05	37.42	40.60	43.99	50.15	55.17	59.14			0.34	2.23	3.16	3.88
		2700	24.36	27.66	30.83	34.41	37.77	40.88	44.18	49.99	54.36	58.69			0.36	2.31	3.28	4.02
		2800	24.63	27.96	31.12	34.69	38.00	41.03	44.23	49.63	53.24				0.37	2.40	3.40	4.17
		2900	24.84	28.17	31.32	34.86	38.11	41.05	44.09	49.01	51.80				0.38	2.48	3.53	4.32
		3000	24.98	28.31	31.44	34.92	38.09	40.92	43.78	48.17	49.99				0.40	2.57	3.65	4.47
	30	3100	25.05	28.36	31.46	34.87	37.94	40.64	43.29	47.91					0.41	2.66	3.77	4.62
		3200	25.05	28.34	31.39	34.72	37.66	40.19	42.62	47.42					0.42	2.74	3.89	4.77
		3300	24.98	28.22	31.22	34.44	37.24	39.59	41.76	47.13					0.44	2.83	4.01	4.92
		3400	24.84	28.03	30.94	34.03	36.68	38.84	40.70	46.70					0.45	2.91	4.13	5.07
		3500	24.61	27.75	30.56	33.52	35.97	37.90	39.44						0.46	3.00	4.26	5.22
	35	3600	24.30	27.37	30.09	32.87	35.11	37.78	39.42						0.48	3.08	4.38	5.37
		3700	23.93	26.89	29.48	32.09	34.10	37.26	38.74						0.49	3.17	4.50	5.52
		3800	23.46	26.32	28.78	31.18	32.93	36.73	38.06						0.50	3.26	4.62	5.66
		3900	22.92	25.65	27.96	30.13	31.60	36.21							0.52	3.34	4.74	5.81
		4000	22.27	24.88	27.01	28.92	30.10	35.68							0.53	3.43	4.86	5.96
	40	4100	21.56	24.00	25.94	28.62	30.16	35.16							0.54	3.51	4.99	6.11
		4200	20.73	23.02	24.75	27.83	29.29								0.56	3.60	5.11	6.26
		4300	19.82	21.92	23.44	27.05	28.43								0.57	3.68	5.23	6.41
		4400	18.82	20.72	21.99	26.26									0.58	3.77	5.35	6.56
		4500	17.71	19.39	20.41	25.48									0.60	3.85	5.47	6.71
	45	4600	17.22	18.63	19.66										0.61	3.94	5.59	6.86
		4700	16.40	17.59	18.47										0.62	4.02	5.71	7.01
		4800	15.58	16.55											0.64	4.11	5.84	7.15
		4900	14.76	15.51											0.65	4.20	5.96	7.30
		5000	13.93	14.46											0.66	4.28	6.08	7.45
	50	5100	13.11												0.68	4.37	6.20	7.60
		5200	12.29												0.69	4.45	6.32	7.75
		5300	11.47												0.70	4.54	6.44	7.90

v > 50 m/s.
Please consult our Application Engineering Department.

v [m/s]

Dynamically balanced (DIN 2211)

Pulleys

$L_w = L_d$

SUPERSEDED

POWER RATINGS

optibelt BLUE POWER PROFILE 8V

NOMINAL POWER RATING P_N [kW]

FOR β = 180° AND 8V 2500/6350 mm L_w

Table 40

Pulleys	v [m/s]	n_k [min⁻¹]	Outside diameter of small pulley d_{ok} [mm] 355	375	400	425	450	475	500	530	560	600	630	710	800	Additional power [kW] per belt for speed ratio i 1.01 to 1.05	1.06 to 1.26	1.27 to 1.57	> 1.57
Dynamically balanced		**700**	39.14	45.42	53.19	60.87	68.49	76.01	83.44	92.23	100.88	112.20	120.48	141.79	164.21	0.53	3.41	4.83	5.93
		950	49.80	57.85	67.75	77.46	86.98	96.29	105.39	116.03	126.31	139.48	148.90	172.07	194.33	0.71	4.62	6.56	8.04
		1450	63.83	74.19	86.60	98.39	109.54	119.98	129.70	140.34	149.81	160.51	167.01			1.09	7.05	10.01	12.28
		50	3.43	3.93	4.56	5.18	5.81	6.44	7.06	7.80	8.55	9.55	10.29	12.26	14.49	0.04	0.24	0.35	0.42
		100	6.61	7.59	8.82	10.05	11.28	12.50	13.73	15.20	16.67	18.62	20.08	23.97	28.32	0.08	0.49	0.69	0.85
		150	9.66	11.13	12.96	14.78	16.60	18.42	20.24	22.43	24.60	27.48	29.65	35.41	41.83	0.11	0.73	1.04	1.27
		200	12.64	14.59	17.01	19.42	21.83	24.23	26.63	29.50	32.37	36.18	39.03	46.59	55.05	0.15	0.97	1.38	1.69
		250	15.57	17.98	20.97	23.97	26.95	29.93	32.90	36.46	40.00	44.70	48.23	57.55	67.96	0.19	1.22	1.73	2.12
	5	300	18.42	21.29	24.86	28.42	31.98	35.52	39.05	43.27	47.47	53.06	57.23	68.26	80.53	0.23	1.46	2.07	2.54
		350	21.22	24.54	28.69	32.80	36.92	41.01	45.08	49.97	54.81	61.25	66.04	78.71	92.74	0.26	1.70	2.42	2.96
		400	23.97	27.73	32.42	37.10	41.75	46.38	51.00	56.50	61.98	69.23	74.63	88.84	104.52	0.30	1.95	2.76	3.39
		450	26.66	30.86	36.09	41.31	46.49	51.65	56.78	62.90	68.98	77.01	82.98	98.66	115.86	0.34	2.19	3.11	3.81
		500	29.29	33.92	39.69	45.43	51.13	56.80	62.43	69.13	75.78	84.56	91.07	108.12	126.70	0.38	2.43	3.45	4.23
	10	550	31.85	36.90	43.20	49.45	55.65	61.81	67.93	75.19	82.39	91.88	98.90	117.19	137.00	0.41	2.68	3.80	4.66
		600	34.34	39.82	46.62	53.37	60.06	66.70	73.26	81.07	88.79	98.92	106.41	125.85	146.72	0.45	2.92	4.14	5.08
		650	36.78	42.66	49.95	57.18	64.34	71.43	78.44	86.76	94.96	105.71	113.62	134.06	155.81	0.49	3.16	4.49	5.50
		700	39.14	45.42	53.19	60.87	68.49	76.01	83.44	92.23	100.88	112.20	120.48	141.79	164.21	0.53	3.41	4.83	5.93
		750	41.44	48.09	56.32	64.46	72.49	80.43	88.24	97.48	106.55	118.36	126.98	149.00	171.88	0.56	3.65	5.18	6.35
		800	43.65	50.67	59.35	67.91	76.36	84.67	92.86	102.51	111.94	124.18	133.10	155.67	178.77	0.60	3.89	5.52	6.77
	15	850	45.79	53.18	62.27	71.23	80.07	88.75	97.26	107.28	117.04	129.67	138.81	161.76	184.84	0.64	4.13	5.87	7.20
		900	47.84	55.55	65.07	74.42	83.61	92.61	101.44	111.79	121.84	134.76	144.09	167.24	190.05	0.68	4.38	6.21	7.62
		950	49.80	57.85	67.75	77.46	86.98	96.29	105.39	116.03	126.31	139.48	148.90	172.07	194.33	0.71	4.62	6.56	8.04
		1000	51.67	60.03	70.29	80.35	90.17	99.76	109.10	119.98	130.45	143.77	153.26	176.22	197.65	0.75	4.86	6.90	8.47
		1050	53.45	62.10	72.72	83.08	93.18	103.01	112.56	123.62	134.23	147.63	157.09	179.66	199.95	0.79	5.11	7.25	8.89
	20	1100	55.13	64.06	75.00	85.64	96.00	106.04	115.75	126.97	137.65	151.05	160.41	182.35	201.18	0.83	5.35	7.60	9.31
		1150	56.71	65.91	77.13	88.03	98.60	108.82	118.66	129.96	140.67	153.99	163.18	184.25	201.29	0.87	5.59	7.94	9.74
		1200	58.18	67.63	79.11	90.24	101.01	111.36	121.30	132.64	143.30	156.42	165.40	185.35	200.24	0.90	5.84	8.29	10.16
		1250	59.56	69.22	80.95	92.27	103.18	113.64	123.62	134.95	145.50	158.35	166.99	185.60	197.99	0.94	6.08	8.63	10.58
		1300	60.80	70.67	82.61	94.12	105.14	115.65	125.64	136.88	147.28	159.74	167.99	185.28		0.98	6.32	8.98	11.01
		1350	61.94	71.99	84.13	95.75	106.85	117.39	127.33	138.43	148.60	160.58	168.34	185.10		1.02	6.57	9.32	11.43
	25	1400	62.94	73.16	85.46	97.19	108.32	118.83	128.69	139.59	149.45	160.85	168.01			1.05	6.81	9.67	11.85
		1450	63.83	74.19	86.60	98.39	109.54	119.98	129.70	140.34	149.81	160.51	167.01			1.09	7.05	10.01	12.28
		1500	64.58	75.05	87.57	99.40	110.49	120.82	130.35	140.66	149.67	159.56	165.28			1.13	7.30	10.36	12.70
		1550	65.20	75.77	88.34	100.16	111.17	121.35	130.63	140.55	149.53	159.52				1.17	7.54	10.70	13.12
		1600	65.69	76.33	88.93	100.70	111.59	121.55	130.54	139.97	149.39	159.18				1.20	7.78	11.05	13.55
		1650	66.02	76.72	89.31	100.98	111.71	121.41	130.05	138.92	149.25					1.24	8.03	11.39	13.97
	30	1700	66.22	76.93	89.47	101.02	111.54	120.93	129.16	137.41	149.11					1.28	8.27	11.74	14.39
		1750	66.26	76.97	89.43	100.81	111.06	120.09	127.86	135.39						1.32	8.51	12.08	14.82
		1800	66.16	76.83	89.17	100.34	110.26	118.87	127.58	134.59						1.35	8.76	12.43	15.24
		1850	65.90	76.50	88.68	99.60	109.16	117.29	126.88							1.39	9.00	12.77	15.66
		1900	65.46	75.98	87.96	98.56	107.72	115.32	126.19							1.43	9.24	13.12	16.09
	35	1950	64.86	75.26	87.00	97.26	105.94	112.95	125.50							1.47	9.49	13.46	16.51
		2000	64.11	74.35	85.81	95.65	103.81	110.17								1.50	9.73	13.81	16.93
		2050	63.15	73.22	84.35	95.46	103.84	109.36								1.54	9.97	14.16	17.36
		2100	62.03	71.89	82.64	94.57	102.72									1.58	10.22	14.50	17.78
	40	2150	60.73	70.35	80.67	93.67	101.59									1.62	10.46	14.85	18.20
		2200	59.25	68.57	78.44	92.78										1.66	10.70	15.15	18.62
		2250	59.25	68.57	78.44	91.89										1.69	10.95	15.54	19.05
		2300	58.12	67.23	76.39											1.73	11.19	15.87	19.47
		2350	57.19	66.12	74.88											1.77	11.43	16.22	19.89
		2400	56.27	65.02	73.37											1.81	11.68	16.56	20.32
	45	2450	55.34	63.92												1.84	11.92	16.90	20.74
		2500	54.41	62.81												1.88	12.16	17.25	21.16
		2550	53.49	61.71												1.92	12.41	17.59	21.59
		2600	52.56													1.96	12.65	17.94	22.01
	50	2650	51.63													2.00	12.89	18.28	22.43
		2700	50.71													2.03	13.14	18.62	22.85
																			v [m/s]
			Dynamically balanced (ARPM/MPTA)																Pulleys

v > 50 m/s.
Please consult our Application Engineering Department.

$L_w = L_d$

PRODUCT DESIGNER

POWER RATINGS

optibelt SK PROFILE SPZ, 3V/9N, 3V/9J

NOMINAL POWER RATING P_N [kW]

FOR β = 180° AND L_d = 1600 mm

Table 41

Pulleys	v [m/s]	n_k [min⁻¹]	Datum diameter of small pulley d_{dk} [mm] 63	71	80	85	90	95	100	112	125	132	140	150	160	180	200	Additional power [kW] per belt for speed ratio i 1.01 to 1.05	1.06 to 1.26	1.27 to 1.57	> 1.57
Statically balanced		**700**	0.50	0.68	0.88	1.00	1.11	1.22	1.33	1.60	1.88	2.03	2.20	2.42	2.63	3.05	3.47	0.01	0.06	0.09	0.11
		950	0.63	0.87	1.14	1.29	1.44	1.59	1.74	2.08	2.46	2.66	2.89	3.17	3.45	4.00	4.54	0.01	0.09	0.12	0.15
		1450	0.87	1.23	1.62	1.84	2.06	2.27	2.49	3.00	3.54	3.83	4.16	4.56	4.96	5.75	6.51	0.02	0.13	0.19	0.23
		2850	1.38	2.03	2.74	3.13	3.52	3.90	4.27	5.15	6.07	6.55	7.08	7.72	8.34	9.50	10.55	0.04	0.26	0.37	0.46
		100	0.10	0.13	0.16	0.18	0.20	0.22	0.24	0.28	0.33	0.35	0.38	0.42	0.45	0.52	0.59	0.00	0.01	0.01	0.02
		200	0.18	0.24	0.30	0.34	0.37	0.41	0.44	0.52	0.61	0.66	0.71	0.78	0.85	0.98	1.12	0.00	0.02	0.03	0.03
		300	0.25	0.33	0.43	0.48	0.53	0.58	0.63	0.75	0.88	0.95	1.03	1.13	1.23	1.42	1.62	0.00	0.03	0.04	0.05
		400	0.32	0.43	0.55	0.62	0.68	0.75	0.81	0.97	1.14	1.23	1.34	1.47	1.59	1.85	2.10	0.01	0.04	0.05	0.06
		500	0.38	0.51	0.66	0.75	0.83	0.91	0.99	1.19	1.39	1.51	1.63	1.79	1.95	2.26	2.57	0.01	0.05	0.07	0.08
		600	0.44	0.60	0.78	0.87	0.97	1.07	1.16	1.39	1.64	1.77	1.92	2.11	2.29	2.66	3.02	0.01	0.06	0.08	0.10
		700	0.50	0.68	0.88	1.00	1.11	1.22	1.33	1.60	1.88	2.03	2.20	2.42	2.63	3.05	3.47	0.01	0.06	0.09	0.11
		800	0.55	0.76	0.99	1.12	1.24	1.37	1.50	1.79	2.12	2.29	2.48	2.72	2.96	3.44	3.91	0.01	0.07	0.11	0.13
		900	0.61	0.84	1.09	1.24	1.38	1.52	1.66	1.99	2.35	2.54	2.75	3.02	3.29	3.81	4.33	0.01	0.08	0.12	0.15
		1000	0.66	0.91	1.19	1.35	1.51	1.66	1.81	2.18	2.57	2.78	3.02	3.31	3.61	4.18	4.75	0.01	0.09	0.13	0.16
		1100	0.71	0.98	1.29	1.46	1.63	1.80	1.97	2.37	2.79	3.02	3.28	3.60	3.92	4.54	5.16	0.02	0.10	0.14	0.18
		1200	0.76	1.06	1.39	1.57	1.76	1.94	2.12	2.55	3.01	3.26	3.54	3.88	4.22	4.90	5.56	0.02	0.11	0.16	0.19
		1300	0.80	1.12	1.48	1.68	1.88	2.07	2.27	2.73	3.23	3.49	3.79	4.16	4.52	5.24	5.95	0.02	0.12	0.17	0.21
		1400	0.85	1.19	1.58	1.79	2.00	2.21	2.42	2.91	3.44	3.72	4.04	4.43	4.82	5.58	6.32	0.02	0.13	0.18	0.23
	5	1500	0.89	1.26	1.67	1.89	2.12	2.34	2.56	3.08	3.64	3.94	4.28	4.69	5.11	5.91	6.69	0.02	0.14	0.20	0.24
		1600	0.93	1.32	1.76	2.00	2.23	2.47	2.70	3.26	3.85	4.16	4.52	4.95	5.39	6.23	7.05	0.02	0.15	0.21	0.26
		1700	0.98	1.39	1.85	2.10	2.35	2.59	2.84	3.42	4.05	4.38	4.75	5.21	5.66	6.55	7.40	0.02	0.16	0.22	0.27
		1800	1.02	1.45	1.93	2.20	2.46	2.72	2.98	3.59	4.24	4.59	4.98	5.46	5.93	6.85	7.74	0.03	0.17	0.24	0.29
		1900	1.06	1.51	2.02	2.29	2.57	2.84	3.11	3.75	4.43	4.80	5.20	5.70	6.19	7.15	8.07	0.03	0.18	0.25	0.31
		2000	1.10	1.57	2.10	2.39	2.68	2.96	3.24	3.91	4.62	5.00	5.42	5.94	6.45	7.44	8.38	0.03	0.19	0.26	0.32
		2100	1.13	1.63	2.18	2.48	2.78	3.08	3.37	4.07	4.81	5.20	5.64	6.17	6.70	7.72	8.68	0.03	0.19	0.28	0.34
		2200	1.17	1.69	2.26	2.58	2.89	3.20	3.50	4.22	4.99	5.39	5.84	6.40	6.94	7.99	8.98	0.03	0.20	0.29	0.35
		2300	1.20	1.74	2.34	2.67	2.99	3.31	3.63	4.38	5.17	5.58	6.05	6.62	7.18	8.25	9.26	0.03	0.21	0.30	0.37
		2400	1.24	1.80	2.42	2.75	3.09	3.42	3.75	4.52	5.34	5.77	6.25	6.84	7.41	8.50	9.52	0.03	0.22	0.32	0.39
		2500	1.27	1.85	2.49	2.84	3.19	3.53	3.87	4.67	5.51	5.95	6.44	7.04	7.63	8.74	9.77	0.04	0.23	0.33	0.40
		2600	1.31	1.90	2.57	2.93	3.28	3.64	3.99	4.81	5.67	6.12	6.63	7.25	7.84	8.97	10.01	0.04	0.24	0.34	0.42
		2700	1.34	1.96	2.64	3.01	3.38	3.74	4.10	4.95	5.83	6.30	6.81	7.44	8.05	9.19	10.24	0.04	0.25	0.35	0.44
		2800	1.37	2.01	2.71	3.09	3.47	3.85	4.22	5.08	5.99	6.46	6.99	7.63	8.25	9.40	10.45	0.04	0.26	0.37	0.45
		2900	1.40	2.05	2.78	3.17	3.56	3.95	4.33	5.22	6.14	6.63	7.16	7.81	8.44	9.60	10.64	0.04	0.27	0.38	0.47
	10	3000	1.43	2.10	2.85	3.25	3.65	4.05	4.43	5.34	6.29	6.78	7.33	7.99	8.62	9.79	10.82	0.04	0.28	0.39	0.48
		3100	1.45	2.15	2.91	3.33	3.74	4.14	4.54	5.47	6.43	6.93	7.49	8.16	8.79	9.96	10.99	0.04	0.29	0.41	0.50
		3200	1.48	2.19	2.98	3.40	3.82	4.24	4.64	5.59	6.57	7.08	7.64	8.32	8.95	10.12	11.14	0.05	0.30	0.42	0.52
		3300	1.51	2.24	3.04	3.48	3.91	4.33	4.74	5.71	6.71	7.22	7.79	8.47	9.11	10.28	11.27	0.05	0.31	0.43	0.53
		3400	1.53	2.28	3.10	3.55	3.99	4.42	4.84	5.83	6.84	7.36	7.93	8.61	9.26	10.41	11.39	0.05	0.31	0.45	0.55
		3500	1.56	2.32	3.16	3.62	4.06	4.50	4.94	5.94	6.96	7.49	8.07	8.75	9.39	10.54	11.48	0.05	0.32	0.46	0.56
		3600	1.58	2.36	3.22	3.68	4.14	4.59	5.03	6.04	7.08	7.61	8.20	8.88	9.52	10.65	11.56	0.05	0.33	0.47	0.58
		3700	1.60	2.40	3.28	3.75	4.22	4.67	5.12	6.15	7.20	7.73	8.32	9.00	9.64	10.75	11.62	0.05	0.34	0.49	0.60
		3800	1.62	2.44	3.33	3.81	4.29	4.75	5.20	6.25	7.31	7.85	8.43	9.12	9.75	10.83	11.67	0.05	0.35	0.50	0.61
		3900	1.64	2.48	3.39	3.88	4.36	4.83	5.29	6.35	7.41	7.95	8.54	9.22	9.85	10.90	11.69	0.06	0.36	0.51	0.63
		4000	1.66	2.51	3.44	3.94	4.43	4.90	5.37	6.44	7.51	8.06	8.64	9.32	9.93	10.96	11.70	0.06	0.37	0.53	0.64
		4100	1.68	2.55	3.49	4.00	4.49	4.97	5.45	6.53	7.61	8.15	8.73	9.41	10.01	11.00	11.68	0.06	0.38	0.54	0.66
		4200	1.70	2.58	3.54	4.05	4.55	5.04	5.52	6.61	7.70	8.24	8.82	9.48	10.08	11.03	11.64	0.06	0.39	0.55	0.68
		4300	1.72	2.61	3.58	4.11	4.62	5.11	5.59	6.69	7.78	8.32	8.90	9.55	10.13	11.04	11.59	0.06	0.40	0.57	0.69
		4400	1.73	2.64	3.63	4.16	4.67	5.18	5.66	6.77	7.86	8.40	8.97	9.61	10.17	11.03	11.51	0.06	0.41	0.58	0.71
		4500	1.75	2.67	3.67	4.21	4.73	5.24	5.73	6.84	7.93	8.47	9.03	9.66	10.21	11.01	11.41	0.06	0.42	0.59	0.73
	15	4600	1.76	2.70	3.71	4.26	4.78	5.30	5.79	6.91	8.00	8.53	9.09	9.70	10.23	10.97		0.07	0.43	0.60	0.74
		4700	1.77	2.73	3.75	4.30	4.84	5.35	5.85	6.97	8.06	8.59	9.13	9.73	10.24	10.92		0.07	0.44	0.62	0.76
		4800	1.78	2.75	3.79	4.35	4.88	5.40	5.91	7.03	8.11	8.63	9.17	9.76	10.23	10.85		0.07	0.44	0.63	0.77
		4900	1.80	2.78	3.83	4.39	4.93	5.45	5.96	7.08	8.16	8.68	9.20	9.77	10.22	10.76		0.07	0.45	0.64	0.79
		5000	1.81	2.80	3.86	4.43	4.97	5.50	6.01	7.13	8.20	8.71	9.22	9.77	10.19	10.65		0.07	0.46	0.66	0.81
		5100	1.81	2.82	3.89	4.47	5.02	5.55	6.05	7.18	8.24	8.74	9.24	9.75	10.15			0.07	0.47	0.67	0.82
		5200	1.82	2.84	3.93	4.50	5.05	5.59	6.10	7.22	8.27	8.76	9.24	9.73	10.09			0.07	0.48	0.68	0.84
		5300	1.83	2.86	3.95	4.53	5.09	5.63	6.14	7.26	8.29	8.77	9.23	9.70	10.03			0.08	0.49	0.70	0.85
		5400	1.83	2.87	3.98	4.56	5.12	5.66	6.17	7.29	8.31	8.77	9.22	9.66	9.95			0.08	0.50	0.71	0.87
		5500	1.84	2.89	4.01	4.59	5.16	5.69	6.20	7.31	8.32	8.77	9.20	9.60				0.08	0.51	0.72	0.89
		5600	1.84	2.90	4.03	4.62	5.18	5.72	6.23	7.33	8.32	8.75	9.16	9.53				0.08	0.52	0.74	0.90
		5800	1.84	2.93	4.07	4.66	5.23	5.77	6.28	7.36	8.30	8.71	9.07	9.37				0.08	0.54	0.76	0.93
		6000	1.84	2.94	4.10	4.70	5.27	5.80	6.31	7.36	8.26	8.62	8.93					0.09	0.56	0.79	0.97
	20	6200	1.84	2.96	4.12	4.72	5.29	5.82	6.32	7.35	8.19	8.51	8.76					0.09	0.57	0.81	1.00
		6400	1.83	2.96	4.13	4.74	5.30	5.83	6.32	7.31	8.08	8.35	8.54					0.09	0.59	0.84	1.03
		6600	1.81	2.96	4.14	4.74	5.30	5.82	6.30	7.25	7.94							0.09	0.61	0.87	1.06
		6800	1.79	2.95	4.14	4.74	5.29	5.80	6.26	7.16	7.78							0.10	0.63	0.89	1.10
		7000	1.77	2.94	4.12	4.72	5.27	5.76	6.21	7.05	7.58							0.10	0.65	0.92	1.13
		7200	1.74	2.91	4.10	4.69	5.23	5.71	6.14	6.92	7.34							0.10	0.67	0.95	1.16
		7400	1.70	2.89	4.07	4.65	5.18	5.64	6.05	6.76								0.11	0.69	0.97	1.19
	25	7600	1.66	2.85	4.02	4.60	5.11	5.56	5.94	6.58								0.11	0.70	1.00	1.22
		7800	1.62	2.81	3.97	4.53	5.03	5.46	5.82	6.37								0.11	0.72	1.03	1.26
		8000	1.57	2.76	3.91	4.46	4.94	5.34	5.67	6.13								0.11	0.74	1.05	1.29
		8200	1.51	2.70	3.83	4.37	4.83	5.21	5.50									0.12	0.76	1.08	1.32
		8400	1.45	2.63	3.75	4.27	4.70	5.05	5.32									0.12	0.78	1.10	1.35
			30	35			40														v [m/s]
			Dynamically balanced (for details see DIN 2211)																		Pulleys

v > 42 m/s.
Please consult our Application Engineering Department.

Note: Pulley diameters shown are outside diameters for sections 3V/9N, 3V/9J.

 © ARNTZ OPTIBELT GROUP, GERMANY

POWER RATINGS

optibelt SK PROFILE SPA

NOMINAL POWER RATING P_N [kW]

FOR β = 180° AND L_d = 2500 mm

Table 42

n_k [min⁻¹]	90	100	112	118	125	132	140	150	160	180	200	224	250	280	315	1.01 to 1.05	1.06 to 1.26	1.27 to 1.57	> 1.57
	Datum diameter of small pulley d_{dk} [mm]															Additional power [kW] per belt for speed ratio i			
700	1.17	1.55	1.99	2.21	2.47	2.72	3.01	3.37	3.73	4.44	5.14	5.97	6.85	7.86	9.01	0.02	0.15	0.21	0.26
950	1.49	1.98	2.57	2.86	3.20	3.53	3.91	4.39	4.86	5.78	6.70	7.78	8.92	10.21	11.68	0.03	0.20	0.29	0.36
1450	2.04	2.76	3.62	4.04	4.53	5.02	5.57	6.25	6.92	8.24	9.52	11.02	12.58	14.30	16.18	0.05	0.31	0.44	0.54
2850	3.14	4.40	5.88	6.60	7.43	8.23	9.13	10.21	11.25	13.21	14.97	16.81	18.43	19.78	20.57	0.09	0.61	0.87	1.07
100	0.23	0.30	0.37	0.40	0.45	0.49	0.54	0.60	0.65	0.77	0.89	1.03	1.18	1.35	1.55	0.00	0.02	0.03	0.04
200	0.42	0.54	0.68	0.75	0.83	0.91	1.00	1.11	1.22	1.45	1.67	1.94	2.22	2.55	2.92	0.01	0.04	0.06	0.07
300	0.59	0.76	0.96	1.07	1.18	1.30	1.43	1.60	1.76	2.09	2.41	2.80	3.21	3.68	4.23	0.01	0.06	0.09	0.11
400	0.75	0.97	1.24	1.37	1.52	1.67	1.85	2.06	2.28	2.70	3.12	3.63	4.16	4.78	5.49	0.01	0.09	0.12	0.15
500	0.90	1.17	1.50	1.66	1.85	2.03	2.25	2.51	2.77	3.30	3.81	4.43	5.09	5.84	6.70	0.02	0.11	0.15	0.19
600	1.04	1.36	1.75	1.94	2.16	2.38	2.63	2.95	3.26	3.87	4.48	5.21	5.98	6.86	7.88	0.02	0.13	0.18	0.22
700	1.17	1.55	1.99	2.21	2.47	2.72	3.01	3.37	3.73	4.44	5.14	5.97	6.85	7.86	9.01	0.02	0.15	0.21	0.26
800	1.30	1.72	2.23	2.47	2.76	3.05	3.38	3.78	4.19	4.99	5.77	6.71	7.70	8.82	10.11	0.03	0.17	0.24	0.30
900	1.43	1.90	2.45	2.73	3.05	3.37	3.74	4.19	4.64	5.52	6.39	7.43	8.52	9.76	11.17	0.03	0.19	0.27	0.34
1000	1.55	2.06	2.68	2.98	3.34	3.69	4.09	4.58	5.07	6.04	7.00	8.12	9.32	10.66	12.18	0.03	0.22	0.31	0.37
1100	1.66	2.23	2.90	3.23	3.61	4.00	4.43	4.97	5.50	6.55	7.59	8.80	10.09	11.53	13.15	0.04	0.24	0.34	0.41
1200	1.77	2.38	3.11	3.47	3.88	4.30	4.76	5.34	5.92	7.05	8.16	9.46	10.84	12.37	14.08	0.04	0.26	0.37	0.45
1300	1.88	2.54	3.31	3.70	4.15	4.59	5.09	5.71	6.33	7.54	8.72	10.10	11.55	13.17	14.96	0.04	0.28	0.40	0.49
1400	1.99	2.69	3.52	3.93	4.40	4.87	5.41	6.07	6.72	8.01	9.26	10.72	12.25	13.93	15.79	0.05	0.30	0.43	0.52
1500	2.09	2.83	3.71	4.15	4.65	5.15	5.72	6.42	7.11	8.47	9.79	11.32	12.91	14.66	16.56	0.05	0.32	0.46	0.56
1600	2.19	2.97	3.91	4.37	4.90	5.43	6.02	6.76	7.49	8.91	10.29	11.89	13.54	15.34	17.29	0.05	0.34	0.49	0.60
1700	2.28	3.11	4.09	4.58	5.14	5.69	6.32	7.09	7.86	9.34	10.78	12.44	14.14	15.99	17.95	0.06	0.37	0.52	0.64
1800	2.37	3.24	4.27	4.78	5.37	5.95	6.61	7.42	8.21	9.76	11.25	12.97	14.71	16.59	18.56	0.06	0.39	0.55	0.67
1900	2.46	3.37	4.45	4.98	5.60	6.20	6.89	7.73	8.56	10.17	11.71	13.47	15.25	17.14	19.10	0.06	0.41	0.58	0.71
2000	2.54	3.50	4.62	5.18	5.82	6.45	7.16	8.03	8.89	10.55	12.14	13.94	15.75	17.65	19.57	0.07	0.43	0.61	0.75
2100	2.62	3.62	4.79	5.37	6.03	6.69	7.42	8.33	9.22	10.93	12.56	14.39	16.22	18.11	19.98	0.07	0.45	0.64	0.79
2200	2.70	3.74	4.95	5.55	6.24	6.92	7.68	8.61	9.53	11.29	12.95	14.81	16.65	18.52	20.32	0.07	0.47	0.67	0.82
2300	2.78	3.85	5.11	5.73	6.44	7.14	7.93	8.89	9.83	11.63	13.32	15.20	17.04	18.87	20.58	0.08	0.50	0.70	0.86
2400	2.85	3.96	5.26	5.90	6.63	7.36	8.17	9.15	10.12	11.95	13.67	15.57	17.39	19.17	20.77	0.08	0.52	0.73	0.90
2500	2.92	4.07	5.41	6.07	6.82	7.56	8.39	9.41	10.39	12.26	14.00	15.90	17.70	19.41	20.87	0.08	0.54	0.76	0.94
2600	2.99	4.17	5.55	6.23	7.00	7.76	8.62	9.65	10.65	12.56	14.31	16.20	17.96	19.60	20.90	0.09	0.56	0.79	0.97
2700	3.05	4.27	5.69	6.38	7.18	7.96	8.83	9.88	10.90	12.83	14.59	16.47	18.19	19.72	20.83	0.09	0.58	0.82	1.01
2800	3.11	4.36	5.82	6.53	7.34	8.14	9.03	10.11	11.14	13.09	14.85	16.70	18.36	19.78	20.68	0.09	0.60	0.86	1.05
2900	3.16	4.45	5.94	6.67	7.50	8.32	9.22	10.32	11.36	13.32	15.08	16.90	18.49	19.77	20.44	0.10	0.62	0.89	1.09
3000	3.22	4.53	6.06	6.81	7.66	8.49	9.41	10.51	11.57	13.54	15.29	17.07	18.57	19.70		0.10	0.65	0.92	1.12
3100	3.26	4.61	6.18	6.94	7.80	8.64	9.58	10.70	11.77	13.74	15.47	17.20	18.60			0.10	0.67	0.95	1.16
3200	3.31	4.69	6.29	7.06	7.94	8.80	9.74	10.87	11.95	13.92	15.62	17.29	18.58			0.11	0.69	0.98	1.20
3300	3.35	4.76	6.39	7.18	8.07	8.94	9.89	11.03	12.11	14.07	15.75	17.34	18.51			0.11	0.71	1.01	1.24
3400	3.39	4.83	6.49	7.29	8.19	9.07	10.03	11.18	12.26	14.21	15.84	17.35	18.38			0.11	0.73	1.04	1.27
3500	3.43	4.89	6.58	7.39	8.31	9.19	10.17	11.32	12.40	14.32	15.91	17.33	18.20			0.12	0.75	1.07	1.31
3600	3.46	4.95	6.66	7.48	8.41	9.31	10.28	11.44	12.52	14.42	15.95	17.26				0.12	0.77	1.10	1.35
3700	3.49	5.01	6.74	7.57	8.51	9.41	10.39	11.55	12.62	14.48	15.95	17.15				0.12	0.80	1.13	1.39
3800	3.51	5.06	6.81	7.65	8.60	9.50	10.49	11.64	12.70	14.53	15.93	16.99				0.13	0.82	1.16	1.42
3900	3.53	5.10	6.88	7.73	8.68	9.59	10.57	11.72	12.77	14.55	15.87	16.79				0.13	0.84	1.19	1.46
4000	3.55	5.14	6.94	7.79	8.75	9.66	10.65	11.79	12.82	14.55	15.78	16.54				0.13	0.86	1.22	1.50
4100	3.57	5.17	6.99	7.85	8.81	9.73	10.71	11.84	12.85	14.52	15.66					0.14	0.88	1.25	1.54
4200	3.58	5.20	7.04	7.90	8.87	9.78	10.76	11.87	12.87	14.47	15.50					0.14	0.90	1.28	1.57
4300	3.58	5.23	7.08	7.95	8.91	9.82	10.79	11.89	12.86	14.39	15.30					0.14	0.93	1.31	1.61
4400	3.58	5.25	7.11	7.98	8.95	9.85	10.81	11.90	12.84	14.28	15.07					0.15	0.95	1.34	1.65
4500	3.58	5.26	7.13	8.01	8.97	9.87	10.82	11.88	12.80	14.15	14.80					0.15	0.97	1.37	1.69
4600	3.58	5.27	7.15	8.03	8.99	9.88	10.82	11.86	12.73	13.99						0.15	0.99	1.41	1.72
4700	3.57	5.27	7.16	8.04	8.99	9.88	10.80	11.81	12.65	13.80						0.16	1.01	1.44	1.76
4800	3.55	5.27	7.16	8.04	8.99	9.86	10.77	11.75	12.55	13.58						0.16	1.03	1.47	1.80
4900	3.53	5.26	7.16	8.03	8.97	9.84	10.72	11.67	12.43	13.33						0.16	1.05	1.50	1.84
5000	3.51	5.25	7.15	8.01	8.95	9.80	10.66	11.57	12.28	13.05						0.17	1.08	1.53	1.87
5100	3.48	5.23	7.13	7.99	8.91	9.74	10.58	11.45	12.11							0.17	1.10	1.56	1.91
5200	3.45	5.21	7.10	7.95	8.86	9.68	10.49	11.32	11.92							0.17	1.12	1.59	1.95
5300	3.42	5.18	7.06	7.91	8.80	9.60	10.39	11.17	11.71							0.18	1.14	1.62	1.99
5400	3.38	5.14	7.02	7.85	8.73	9.51	10.27	11.00	11.48							0.18	1.16	1.65	2.02
5500	3.33	5.10	6.96	7.79	8.65	9.41	10.13	10.81	11.22							0.18	1.18	1.68	2.06
5600	3.28	5.05	6.90	7.71	8.56	9.29	9.97	10.60								0.19	1.21	1.71	2.10
5700	3.23	4.99	6.83	7.63	8.45	9.16	9.80	10.37								0.19	1.23	1.74	2.13
5800	3.17	4.93	6.75	7.54	8.34	9.01	9.62	10.12								0.19	1.25	1.77	2.17
5900	3.11	4.86	6.66	7.43	8.21	8.85	9.42	9.84								0.20	1.27	1.80	2.21
6000	3.04	4.79	6.57	7.32	8.07	8.68	9.20	9.55								0.20	1.29	1.83	2.25
6100	2.96	4.70	6.46	7.19	7.92	8.49	8.96									0.20	1.31	1.86	2.28
6200	2.89	4.62	6.34	7.06	7.75	8.29	8.70									0.21	1.33	1.89	2.32
6300	2.80	4.52	6.22	6.91	7.57	8.07	8.43									0.21	1.36	1.92	2.36
6400	2.71	4.42	6.09	6.75	7.38	7.84	8.14									0.21	1.38	1.96	2.40
6500	2.62	4.31	5.94	6.58	7.17	7.59	7.83									0.22	1.40	1.99	2.43
6600	2.52	4.19	5.79	6.40	6.95											0.22	1.42	2.02	2.47
6700	2.42	4.07	5.62	6.21	6.72											0.22	1.44	2.05	2.51
6800	2.31	3.94	5.45	6.01	6.48											0.23	1.46	2.08	2.55
6900	2.19	3.80	5.27	5.79	6.22											0.23	1.49	2.11	2.58
7000	2.07	3.66	5.07	5.56	5.94											0.23	1.51	2.14	2.62

v > 42 m/s.
Please consult our Application Engineering Department.

v [m/s]: 5, 10, 15, 20, 25, 30, 35, 40

Pulleys: Statically balanced / Dynamically balanced (for details see DIN 2211)

POWER RATINGS

optibelt SK PROFILE SPB, 5V/15N, 5V/15J

NOMINAL POWER RATING P_N [kW]

FOR β = 180° AND L_d = 3550 mm

Table 43

Pulleys	v [m/s]	n_k [min⁻¹]	Datum diameter of small pulley d_{dk} [mm] 140	150	160	180	190	200	212	224	236	250	280	315	355	375	400	Additional power [kW] per belt for speed ratio i 1.01 to 1.05	1.06 to 1.26	1.27 to 1.57	> 1.57
Statically balanced		**700**	3.46	4.04	4.62	5.77	6.34	6.91	7.59	8.26	8.92	9.70	11.33	13.21	15.30	16.33	17.59	0.05	0.33	0.47	0.58
		950	4.42	5.19	5.95	7.46	8.20	8.94	9.82	10.69	11.56	12.56	14.66	17.04	19.67	20.94	22.50	0.07	0.45	0.64	0.78
		1450	6.09	7.20	8.29	10.44	11.49	12.53	13.76	14.96	16.15	17.50	20.30	23.36	26.59	28.08	29.83	0.11	0.69	0.97	1.20
		2850	9.07	10.83	12.53	15.71	17.18	18.57	20.13	21.57	22.87	24.21	26.40	27.68				0.21	1.35	1.92	2.35
		100	0.66	0.76	0.85	1.04	1.14	1.23	1.35	1.46	1.57	1.70	1.98	2.30	2.66	2.84	3.07	0.01	0.05	0.07	0.08
		200	1.21	1.39	1.57	1.94	2.12	2.30	2.51	2.73	2.94	3.19	3.72	4.33	5.02	5.36	5.79	0.01	0.09	0.13	0.16
		300	1.71	1.97	2.24	2.77	3.03	3.29	3.61	3.92	4.23	4.59	5.36	6.24	7.25	7.74	8.36	0.02	0.14	0.20	0.25
		400	2.17	2.52	2.87	3.56	3.91	4.25	4.66	5.06	5.47	5.94	6.93	8.08	9.38	10.03	10.82	0.03	0.19	0.27	0.33
		500	2.62	3.05	3.48	4.32	4.75	5.16	5.66	6.16	6.66	7.23	8.45	9.85	11.43	12.22	13.18	0.04	0.24	0.34	0.41
	5	600	3.05	3.55	4.06	5.06	5.56	6.05	6.64	7.23	7.81	8.48	9.92	11.56	13.41	14.32	15.44	0.04	0.28	0.40	0.49
		700	3.46	4.04	4.62	5.77	6.34	6.91	7.59	8.26	8.92	9.70	11.33	13.21	15.30	16.33	17.59	0.05	0.33	0.47	0.58
		800	3.85	4.51	5.17	6.46	7.10	7.74	8.50	9.26	10.00	10.87	12.70	14.79	17.11	18.25	19.64	0.06	0.38	0.54	0.66
		900	4.23	4.96	5.69	7.13	7.84	8.55	9.39	10.22	11.05	12.00	14.02	16.30	18.84	20.07	21.57	0.07	0.43	0.61	0.74
		1000	4.60	5.40	6.20	7.78	8.56	9.33	10.25	11.16	12.06	13.10	15.28	17.75	20.47	21.79	23.39	0.07	0.47	0.67	0.82
		1100	4.95	5.83	6.69	8.41	9.25	10.09	11.08	12.06	13.03	14.15	16.50	19.13	22.01	23.40	25.07	0.08	0.52	0.74	0.91
		1200	5.29	6.24	7.17	9.01	9.92	10.82	11.88	12.93	13.97	15.16	17.65	20.44	23.46	24.89	26.62	0.09	0.57	0.81	0.99
		1300	5.62	6.63	7.63	9.60	10.57	11.52	12.65	13.77	14.87	16.13	18.76	21.67	24.79	26.26	28.02	0.10	0.62	0.87	1.07
	10	1400	5.94	7.01	8.08	10.16	11.19	12.20	13.40	14.57	15.73	17.06	19.80	22.82	26.02	27.51	29.27	0.10	0.66	0.94	1.15
		1500	6.24	7.38	8.51	10.71	11.79	12.85	14.11	15.34	16.55	17.93	20.78	23.88	27.12	28.62	30.35	0.11	0.71	1.01	1.24
		1600	6.54	7.73	8.92	11.23	12.36	13.48	14.79	16.07	17.33	18.76	21.69	24.86	28.11	29.58	31.26	0.12	0.76	1.08	1.32
		1700	6.82	8.07	9.31	11.73	12.91	14.07	15.44	16.77	18.07	19.54	22.54	25.74	28.96	30.39	31.99	0.12	0.81	1.14	1.40
		1800	7.08	8.40	9.69	12.21	13.44	14.64	16.05	17.42	18.76	20.27	23.31	26.52	29.68	31.04	32.53	0.13	0.85	1.21	1.48
		1900	7.34	8.71	10.05	12.67	13.93	15.18	16.63	18.04	19.40	20.94	24.02	27.20	30.25	31.53	32.86	0.14	0.90	1.28	1.57
		2000	7.58	9.00	10.39	13.10	14.41	15.68	17.17	18.61	20.00	21.56	24.64	27.77	30.68	31.84	32.99	0.15	0.95	1.34	1.65
	15	2100	7.81	9.28	10.72	13.51	14.85	16.15	17.67	19.14	20.55	22.11	25.19	28.24	30.94	31.96	32.89	0.15	0.99	1.41	1.73
		2200	8.02	9.54	11.03	13.89	15.26	16.59	18.14	19.62	21.04	22.61	25.65	28.58	31.05	31.90	32.57	0.16	1.04	1.48	1.81
		2300	8.22	9.79	11.31	14.24	15.64	17.00	18.57	20.06	21.48	23.05	26.03	28.81	30.98	31.63		0.17	1.09	1.55	1.90
		2400	8.41	10.02	11.58	14.57	16.00	17.37	18.95	20.45	21.87	23.41	26.31	28.91	30.74	31.16		0.18	1.14	1.61	1.98
		2500	8.58	10.23	11.83	14.88	16.32	17.70	19.29	20.79	22.20	23.72	26.50	28.88	30.31			0.18	1.18	1.68	2.06
		2600	8.74	10.42	12.06	15.15	16.61	18.00	19.59	21.08	22.47	23.95	26.60	28.71				0.19	1.23	1.75	2.14
	20	2700	8.88	10.60	12.26	15.39	16.86	18.26	19.84	21.31	22.67	24.11	26.60	28.41				0.20	1.28	1.82	2.23
		2800	9.01	10.76	12.45	15.61	17.08	18.48	20.05	21.50	22.82	24.19	26.49	27.96				0.21	1.33	1.88	2.31
		2900	9.12	10.90	12.61	15.79	17.27	18.66	20.20	21.62	22.90	24.20	26.28	27.36				0.21	1.37	1.95	2.39
		3000	9.22	11.02	12.75	15.95	17.42	18.79	20.31	21.69	22.91	24.13	25.96					0.22	1.42	2.02	2.47
		3100	9.30	11.12	12.86	16.07	17.53	18.88	20.37	21.70	22.85	23.98						0.23	1.47	2.08	2.56
		3200	9.36	11.21	12.96	16.16	17.60	18.93	20.38	21.64	22.72	23.74						0.23	1.52	2.15	2.64
		3300	9.41	11.27	13.02	16.21	17.63	18.93	20.33	21.53	22.52	23.42						0.24	1.56	2.22	2.72
	25	3400	9.44	11.31	13.07	16.23	17.63	18.89	20.22	21.35	22.25	23.01						0.25	1.61	2.29	2.80
		3500	9.45	11.33	13.08	16.22	17.58	18.80	20.06	21.10	21.90	22.51						0.26	1.66	2.35	2.89
		3600	9.45	11.33	13.08	16.17	17.49	18.66	19.84	20.78								0.26	1.71	2.42	2.97
		3700	9.42	11.30	13.04	16.08	17.36	18.47	19.57	20.40								0.27	1.75	2.49	3.05
		3800	9.38	11.25	12.98	15.95	17.18	18.22	19.23	19.94								0.28	1.80	2.55	3.13
		3900	9.31	11.18	12.89	15.78	16.95	17.93	18.83	19.41								0.29	1.85	2.62	3.21
	30	4000	9.23	11.09	12.77	15.58	16.68	17.58	18.36	18.81								0.29	1.89	2.69	3.30
		4100	9.13	10.97	12.62	15.33	16.36	17.17										0.30	1.94	2.76	3.38
		4200	9.01	10.82	12.44	15.04	16.00	16.71										0.31	1.99	2.82	3.46
		4300	8.86	10.65	12.23	14.71	15.58	16.19										0.32	2.04	2.89	3.54
		4400	8.70	10.46	11.99	14.33	15.11	15.62										0.32	2.08	2.96	3.63
		4500	8.51	10.24	11.72	13.92	14.60	14.98										0.33	2.13	3.03	3.71
		4600	8.30	9.99	11.42	13.45												0.34	2.18	3.09	3.79
	35	4700	8.07	9.72	11.08	12.94												0.34	2.23	3.16	3.87
		4800	7.82	9.41	10.72	12.38												0.35	2.27	3.23	3.96
		4900	7.54	9.08	10.31	11.78												0.36	2.32	3.29	4.04
		5000	7.24	8.72	9.87	11.13												0.37	2.37	3.36	4.12
		5100	6.92	8.33	9.40													0.37	2.42	3.43	4.20
		5200	6.57	7.91	8.89													0.38	2.46	3.50	4.29
		5300	6.19	7.46	8.34													0.39	2.51	3.56	4.37
	40	5400	5.79	6.98	7.76													0.40	2.56	3.63	4.45
		5500	5.37	6.47	7.14													0.40	2.61	3.70	4.53
														v > 42 m/s. Please consult our Application Engineering Department.							
																					v [m/s]
Dynamically balanced (for details see DIN 2211)																					Pulleys

Note: Pulley diameters shown are outside diameters for sections 5V/15N, 5V/15J.

 © ARNTZ OPTIBELT GROUP, GERMANY

POWER RATINGS

optibelt SK PROFILE SPC

NOMINAL POWER RATING P_N [kW]

FOR β = 180° AND L_d = 5600 mm

Table 44

Pulleys	v [m/s]	n_k [min⁻¹]	Datum diameter of small pulley d_{dk} [mm] 224	250	280	300	315	335	355	375	400	450	500	560	630	710	Additional power [kW] per belt for speed ratio i 1.01 to 1.05	1.06 to 1.26	1.27 to 1.57	> 1.57
Statically balanced		**700**	10.46	13.11	16.13	18.11	19.58	21.52	23.44	25.34	27.68	32.24	36.64	41.70	47.28	53.19	0.14	0.90	1.28	1.57
		950	13.27	16.71	20.58	23.11	24.97	27.42	29.82	32.18	35.05	40.55	45.70	51.38	57.27	62.91	0.19	1.22	1.73	2.13
		1450	17.79	22.48	27.64	30.92	33.30	36.35	39.26	42.02	45.25	50.94	55.51	59.36	61.37		0.29	1.86	2.65	3.25
		2850	20.63	25.52	29.58	31.27	31.96										0.57	3.67	5.20	6.38
		50	1.08	1.31	1.58	1.75	1.89	2.06	2.23	2.41	2.62	3.05	3.48	3.99	4.58	5.25	0.01	0.06	0.09	0.11
		100	1.99	2.44	2.94	3.28	3.53	3.87	4.20	4.53	4.95	5.77	6.58	7.56	8.68	9.95	0.02	0.13	0.18	0.22
		200	3.64	4.49	5.46	6.11	6.59	7.22	7.86	8.49	9.28	10.84	12.38	14.22	16.34	18.73	0.04	0.26	0.37	0.45
		300	5.16	6.40	7.81	8.75	9.44	10.37	11.29	12.21	13.34	15.60	17.83	20.47	23.50	26.90	0.06	0.39	0.55	0.67
		350	5.89	7.31	8.94	10.01	10.82	11.88	12.94	13.99	15.30	17.88	20.44	23.45	26.90	30.77	0.07	0.45	0.64	0.78
		400	6.59	8.20	10.04	11.25	12.16	13.36	14.55	15.73	17.21	20.11	22.97	26.35	30.20	34.48	0.08	0.51	0.73	0.90
	5	450	7.28	9.07	11.11	12.46	13.47	14.80	16.12	17.44	19.07	22.28	25.44	29.15	33.37	38.04	0.09	0.58	0.82	1.01
		500	7.95	9.91	12.16	13.64	14.75	16.21	17.66	19.10	20.88	24.39	27.83	31.86	36.42	41.44	0.10	0.64	0.91	1.12
		550	8.60	10.74	13.19	14.80	16.00	17.59	19.16	20.72	22.65	26.44	30.15	34.48	39.34	44.66	0.11	0.71	1.00	1.23
		600	9.23	11.55	14.19	15.93	17.22	18.93	20.62	22.30	24.37	28.44	32.39	36.99	42.13	47.70	0.12	0.77	1.10	1.34
		650	9.85	12.34	15.17	17.03	18.42	20.24	22.05	23.84	26.05	30.37	34.56	39.40	44.78	50.55	0.13	0.84	1.19	1.45
		700	10.46	13.11	16.13	18.11	19.58	21.52	23.44	25.34	27.68	32.24	36.64	41.70	47.28	53.19	0.14	0.90	1.28	1.57
		750	11.05	13.87	17.06	19.16	20.72	22.77	24.80	26.80	29.26	34.04	38.64	43.89	49.62	55.61	0.15	0.96	1.37	1.68
		800	11.63	14.60	17.98	20.19	21.83	23.99	26.11	28.21	30.78	35.77	40.54	45.95	51.80	57.81	0.16	1.03	1.46	1.79
		850	12.19	15.32	18.87	21.19	22.91	25.17	27.39	29.58	32.26	37.44	42.36	47.89	53.80	59.77	0.17	1.09	1.55	1.90
	10	900	12.74	16.02	19.74	22.16	23.96	26.31	28.63	30.90	33.68	39.03	44.08	49.71	55.63	61.47	0.18	1.16	1.64	2.01
		950	13.27	16.71	20.58	23.11	24.97	27.42	29.82	32.18	35.05	40.55	45.70	51.38	57.27	62.91	0.19	1.22	1.73	2.13
		1000	13.79	17.37	21.40	24.03	25.96	28.50	30.98	33.41	36.36	41.99	47.21	52.92	58.71	64.08	0.20	1.29	1.83	2.24
		1050	14.30	18.02	22.20	24.91	26.92	29.53	32.09	34.58	37.61	43.34	48.62	54.30	59.94	64.95	0.21	1.35	1.92	2.35
		1100	14.79	18.64	22.97	25.77	27.84	30.53	33.16	35.71	38.80	44.62	49.92	55.54	60.96	65.53	0.22	1.41	2.01	2.46
		1150	15.26	19.25	23.72	26.61	28.73	31.49	34.18	36.78	39.93	45.81	51.10	56.61	61.76	65.79	0.23	1.48	2.10	2.57
		1200	15.72	19.84	24.44	27.41	29.58	32.41	35.15	37.80	40.99	46.90	52.16	57.52	62.33	65.72	0.24	1.54	2.19	2.69
		1250	16.17	20.41	25.13	28.17	30.40	33.28	36.07	38.76	41.98	47.91	53.10	58.25	62.65	65.31	0.25	1.61	2.28	2.80
	15	1300	16.60	20.96	25.80	28.91	31.18	34.12	36.95	39.67	42.91	48.82	53.90	58.81	62.73		0.26	1.67	2.37	2.91
		1350	17.01	21.49	26.44	29.62	31.93	34.91	37.77	40.52	43.77	49.63	54.58	59.19	62.55		0.27	1.74	2.46	3.02
		1400	17.41	21.99	27.06	30.29	32.63	35.65	38.54	41.30	44.55	50.34	55.12	59.37	62.10		0.28	1.80	2.56	3.13
		1450	17.79	22.48	27.64	30.92	33.30	36.35	39.26	42.02	45.25	50.94	55.51	59.36	61.37		0.29	1.86	2.65	3.25
		1500	18.16	22.94	28.20	31.53	33.93	37.00	39.92	42.68	45.88	51.44	55.76	59.15			0.30	1.93	2.74	3.36
		1550	18.51	23.39	28.72	32.09	34.52	37.61	40.53	43.27	46.43	51.83	55.86				0.31	1.99	2.83	3.47
		1600	18.84	23.81	29.22	32.62	35.06	38.16	41.07	43.79	46.90	52.10	55.81				0.32	2.06	2.92	3.58
		1650	19.16	24.20	29.68	33.11	35.56	38.66	41.56	44.24	47.29	52.25	55.59				0.33	2.12	3.01	3.69
		1700	19.45	24.58	30.11	33.56	36.02	39.11	41.98	44.62	47.58	52.28	55.21				0.34	2.19	3.10	3.80
	20	1750	19.73	24.92	30.51	33.98	36.43	39.51	42.35	44.93	47.79	52.19	54.67				0.35	2.25	3.19	3.92
		1800	19.99	25.25	30.88	34.35	36.80	39.85	42.64	45.16	47.91	51.97					0.36	2.31	3.29	4.03
		1850	20.24	25.55	31.21	34.68	37.12	40.14	42.87	45.32	47.94	51.62					0.37	2.38	3.38	4.14
		1900	20.46	25.82	31.51	34.97	37.39	40.37	43.04	45.39	47.87	51.14					0.38	2.44	3.47	4.25
		1950	20.66	26.07	31.77	35.22	37.61	40.54	43.13	45.39	47.70	50.52					0.39	2.51	3.56	4.36
		2000	20.85	26.29	31.99	35.42	37.79	40.65	43.16	45.30	47.44	49.76					0.40	2.57	3.65	4.48
		2050	21.01	26.49	32.18	35.58	37.91	40.69	43.11	45.13	47.07						0.41	2.64	3.74	4.59
		2100	21.16	26.66	32.34	35.69	37.97	40.68	42.99	44.87	46.60						0.42	2.70	3.83	4.70
	25	2150	21.28	26.79	32.45	35.76	37.99	40.60	42.79	44.52	46.02						0.43	2.77	3.92	4.81
		2200	21.38	26.91	32.52	35.78	37.95	40.46	42.51	44.08	45.33						0.44	2.83	4.02	4.92
		2250	21.46	26.99	32.56	35.75	37.85	40.25	42.16	43.55	44.53						0.45	2.89	4.11	5.04
		2300	21.52	27.04	32.55	35.67	37.70	39.97	41.73								0.46	2.96	4.20	5.15
		2350	21.56	27.06	32.50	35.54	37.49	39.63	41.21								0.47	3.02	4.29	5.26
		2400	21.57	27.05	32.41	35.36	37.22	39.21	40.61								0.48	3.09	4.38	5.37
		2450	21.57	27.02	32.28	35.13	36.89	38.72	39.93								0.49	3.15	4.47	5.48
		2500	21.53	26.94	32.10	34.84	36.50	38.16	39.16								0.50	3.22	4.56	5.60
		2550	21.48	26.84	31.88	34.50	36.05										0.51	3.28	4.66	5.71
	30	2600	21.40	26.71	31.62	34.10	35.53										0.52	3.34	4.75	5.82
		2650	21.30	26.54	31.30	33.65	34.95										0.53	3.41	4.84	5.93
		2700	21.17	26.33	30.94	33.14	34.30										0.54	3.47	4.93	6.04
		2750	21.02	26.10	30.54	32.58	33.59										0.55	3.54	5.02	6.16
		2800	20.84	25.83	30.08												0.56	3.60	5.11	6.27
		2850	20.63	25.52	29.58												0.57	3.67	5.20	6.38
		2900	20.40	25.18	29.03												0.58	3.73	5.29	6.49
	35	2950	20.14	24.80	28.42												0.59	3.79	5.39	6.60
		3000	19.86	24.38	27.77												0.60	3.86	5.48	6.71
		3050	19.55	23.93	27.06												0.61	3.92	5.57	6.83
		3100	19.21	23.43	26.30												0.62	3.99	5.66	6.94
		3150	18.84	22.90	25.49												0.63	4.05	5.75	7.05
		3200	18.44	22.33	24.62												0.64	4.12	5.84	7.16
		3250	18.02	21.72	23.69												0.65	4.18	5.93	7.27
		3300	17.56	21.07													0.66	4.24	6.02	7.39
		3350	17.08	20.38													0.67	4.31	6.12	7.50
	40	3400	16.56	19.65													0.68	4.37	6.21	7.61
		3450	16.02	18.87													0.69	4.44	6.30	7.72
		3500	15.44	18.05													0.70	4.50	6.39	7.83
													v > 42 m/s. Please consult our Application Engineering Department.							
																				v [m/s]
Dynamically balanced (for details see DIN 2211)																				Pulleys

© ARNTZ OPTIBELT GROUP, GERMANY

POWER RATINGS

optibelt SK PROFILE 8V/25N, 8V/25J

NOMINAL POWER RATING P_N [kW]

FOR β = 180° AND 8V 2500/6350 mm L_a

Table 45

Pulleys	v [m/s]	n_k [min⁻¹]	Outside diameter of small pulley d_{ok} [mm] 335	355	375	425	450	475	500	530	560	600	630	710	800	Additional power [kW] per belt for speed ratio i 1.01 to 1.05	1.06 to 1.26	1.27 to 1.57	> 1.57
Statically balanced		**700**	25.67	28.61	31.52	38.62	42.08	45.49	48.82	52.74	56.57	61.51	65.09	74.10	83.23	0.28	1.83	2.60	3.18
		950	32.09	35.77	39.37	48.03	52.17	56.17	60.03	64.47	68.68	73.95	77.62	86.13	93.33	0.38	2.48	3.52	4.32
		1450	40.47	44.90	49.10	58.51	62.60	66.25	69.44	72.63	75.10	77.18	77.79			5.38	6.60		
		50	2.63	2.89	3.16	3.82	4.15	4.48	4.80	5.19	5.58	6.10	6.48	7.51	8.65	0.02	0.13	0.19	0.23
		100	4.87	5.38	5.89	7.15	7.78	8.41	9.03	9.78	10.52	11.51	12.24	14.19	16.37	0.04	0.26	0.37	0.45
		150	6.97	7.71	8.46	10.30	11.22	12.13	13.03	14.12	15.20	16.63	17.70	20.53	23.68	0.06	0.39	0.56	0.68
		200	8.97	9.94	10.91	13.31	14.51	15.69	16.88	18.29	19.69	21.56	22.94	26.61	30.68	0.08	0.52	0.74	0.91
		250	10.89	12.08	13.27	16.22	17.68	19.14	20.59	22.31	24.03	26.30	28.00	32.46	37.40	0.10	0.65	0.93	1.14
	5	300	12.74	14.15	15.56	19.04	20.76	22.47	24.18	26.21	28.22	30.89	32.87	38.09	43.84	0.12	0.78	1.11	1.36
		350	14.54	16.16	17.78	21.77	23.74	25.71	27.66	29.98	32.28	35.32	37.57	43.49	49.98	0.14	0.91	1.30	1.59
		400	16.28	18.11	19.93	24.42	26.64	28.84	31.02	33.62	36.19	39.58	42.10	48.66	55.82	0.16	1.05	1.48	1.82
		450	17.97	20.00	22.01	26.99	29.44	31.87	34.28	37.14	39.97	43.69	46.44	53.59	61.33	0.18	1.18	1.67	2.05
		500	19.61	21.83	24.04	29.48	32.16	34.81	37.43	40.54	43.60	47.62	50.59	58.27	66.50	0.20	1.31	1.86	2.27
		550	21.20	23.61	26.00	31.89	34.78	37.64	40.46	43.80	47.08	51.38	54.54	62.67	71.30	0.22	1.44	2.04	2.50
	10	600	22.74	25.33	27.90	34.22	37.31	40.36	43.37	46.92	50.41	54.95	58.28	66.79	75.70	0.24	1.57	2.23	2.73
		650	24.23	27.00	29.74	36.46	39.75	42.98	46.16	49.91	53.57	58.33	61.80	70.61	79.69	0.26	1.70	2.41	2.96
		700	25.67	28.61	31.52	38.62	42.08	45.49	48.82	52.74	56.57	61.51	65.09	74.10	83.23	0.28	1.83	2.60	3.18
		750	27.06	30.16	33.23	40.69	44.32	47.87	51.35	55.42	59.38	64.46	68.13	77.26	86.31	0.30	1.96	2.78	3.41
		800	28.40	31.66	34.87	42.67	46.45	50.14	53.74	57.94	62.01	67.20	70.92	80.06	88.88	0.32	2.09	2.97	3.64
	15	850	29.68	33.09	36.44	44.56	48.47	52.28	55.99	60.30	64.44	69.70	73.44	82.49	90.92	0.34	2.22	3.15	3.87
		900	30.91	34.46	37.94	46.34	50.38	54.29	58.09	62.47	66.67	71.95	75.67	84.52	92.42	0.36	2.35	3.34	4.09
		950	32.09	35.77	39.37	48.03	52.17	56.17	60.03	64.47	68.68	73.95	77.62	86.13	93.33	0.38	2.48	3.52	4.32
		1000	33.21	37.01	40.72	49.61	53.84	57.90	61.81	66.27	70.48	75.68	79.25	87.31	93.63	0.40	2.61	3.71	4.55
		1050	34.27	38.18	42.00	51.09	55.38	59.49	63.42	67.87	72.04	77.12	80.56	88.04	93.28	0.42	2.74	3.90	4.78
	20	1100	35.27	39.29	43.19	52.45	56.79	60.93	64.85	69.27	73.36	78.28	81.53	88.30	92.28	0.44	2.88	4.08	5.00
		1150	36.21	40.32	44.30	53.69	58.06	62.20	66.11	70.46	74.44	79.13	82.16	88.06	90.56	0.46	3.01	4.27	5.23
		1200	37.09	41.28	45.33	54.82	59.20	63.32	67.17	71.42	75.25	79.66	82.42	87.31	88.14	0.49	3.14	4.45	5.46
		1250	37.90	42.16	46.27	55.82	60.19	64.27	68.04	72.16	75.80	79.87	82.31	86.03		0.51	3.27	4.64	5.69
		1300	38.65	42.97	47.12	56.69	61.03	65.04	68.71	72.65	76.06	79.74	81.80			0.53	3.40	4.82	5.91
		1350	39.33	43.70	47.88	57.44	61.71	65.63	69.17	72.90	76.04	79.25	80.89			0.55	3.53	5.01	6.14
	25	1400	39.93	44.34	48.54	58.04	62.24	66.04	69.42	72.90	75.72		79.56			0.57	3.66	5.19	6.37
		1450	40.47	44.90	49.10	58.51	62.60	66.25	69.44	72.63	75.10		77.79			0.59	3.79	5.38	6.60
		1500	40.93	45.37	49.56	58.84	62.80	66.27	69.24							0.61	3.92	5.57	6.82
		1550	41.31	45.75	49.91	59.01	62.81	66.08	68.80							0.63	4.05	5.75	7.05
		1600	41.62	46.04	50.16	59.04	62.65	65.69	68.11							0.65	4.18	5.94	7.28
		1650	41.85	46.24	50.30	58.90	62.31	65.08	67.18							0.67	4.31	6.12	7.51
	30	1700	41.99	46.34	50.33	58.61	61.77	64.25	65.99							0.69	4.44	6.31	7.73
		1750	42.05	46.35	50.24	58.15	61.05	63.19	64.54							0.71	4.57	6.49	7.96
		1800	42.03	46.25	50.04	57.52	60.12									0.73	4.70	6.68	8.19
		1850	41.92	46.05	49.71	56.72	58.98									0.75	4.84	6.86	8.42
		1900	41.72	45.74	49.26	55.74	57.64									0.77	4.97	7.05	8.64
	35	1950	41.42	45.32	48.69	54.58	56.08									0.79	5.10	7.23	8.87
		2000	41.04	44.79	47.98	53.23	54.31									0.81	5.23	7.42	9.10
		2050	40.55	44.15	47.14											0.83	5.36	7.61	9.33
		2100	39.97	43.40	46.16											0.85	5.49	7.79	9.55
		2150	39.29	42.52	45.05											0.87	5.62	7.98	9.78
		2200	38.50	41.53	43.79											0.89	5.75	8.16	10.01
		2250	37.62	40.41	42.40											0.91	5.88	8.35	10.23
	40																		v [m/s]
Dynamically balanced (for details see ARPM/MPTA)																			Pulleys

v > 42 m/s.
Please consult our Application Engineering Department.

 © ARNTZ OPTIBELT GROUP, GERMANY

POWER RATINGS

optibelt VB PROFILE 5 – RAW EDGE, COGGED

NOMINAL POWER RATING P_N [kW]

FOR β = 180° AND L_d = 312 mm

Table 46

Pulleys	v [m/s]	n_k [min⁻¹]	Datum diameter of small pulley d_{dk} [mm] 16	18	20	22.4	25	28	31.5	33.5	40	45	Additional power [kW] per belt for speed ratio i 1.01 to 1.05	1.06 to 1.26	1.27 to 1.57	> 1.57
Statically balanced	②	**700**	0.02	0.02	0.03	0.03	0.04	0.04	0.05	0.06	0.07	0.08	0.000	0.001	0.002	0.003
		950	0.02	0.03	0.04	0.04	0.05	0.06	0.07	0.07	0.09	0.10	0.000	0.002	0.002	0.004
		1450	0.03	0.04	0.05	0.06	0.07	0.08	0.10	0.11	0.13	0.15	0.001	0.002	0.004	0.005
		2850	0.06	0.07	0.09	0.11	0.13	0.15	0.18	0.19	0.24	0.28	0.001	0.005	0.007	0.011
		200	0.01	0.01	0.01	0.01	0.01	0.02	0.02	0.02	0.02	0.03	0.000	0.000	0.000	0.001
		300	0.01	0.01	0.01	0.02	0.02	0.02	0.02	0.03	0.03	0.04	0.000	0.001	0.001	0.001
		400	0.01	0.01	0.02	0.02	0.02	0.03	0.03	0.03	0.04	0.05	0.000	0.001	0.001	0.001
		500	0.01	0.02	0.02	0.02	0.03	0.03	0.04	0.04	0.05	0.06	0.000	0.001	0.001	0.002
		600	0.02	0.02	0.02	0.03	0.03	0.04	0.05	0.05	0.06	0.07	0.000	0.001	0.001	0.002
		700	0.02	0.02	0.03	0.03	0.04	0.04	0.05	0.06	0.07	0.08	0.000	0.001	0.002	0.003
		800	0.02	0.03	0.03	0.04	0.04	0.05	0.06	0.06	0.08	0.09	0.000	0.001	0.002	0.003
		900	0.02	0.03	0.03	0.04	0.05	0.06	0.06	0.07	0.09	0.10	0.000	0.002	0.002	0.003
		1000	0.03	0.03	0.04	0.04	0.05	0.06	0.07	0.08	0.10	0.11	0.000	0.002	0.002	0.004
		1100	0.03	0.03	0.04	0.05	0.06	0.07	0.08	0.08	0.10	0.12	0.000	0.002	0.003	0.004
		1200	0.03	0.04	0.04	0.05	0.06	0.07	0.08	0.09	0.11	0.13	0.001	0.002	0.003	0.004
		1300	0.03	0.04	0.05	0.06	0.07	0.08	0.09	0.10	0.12	0.14	0.001	0.002	0.003	0.005
		1400	0.03	0.04	0.05	0.06	0.07	0.08	0.10	0.10	0.13	0.15	0.001	0.002	0.003	0.005
		1500	0.03	0.04	0.05	0.06	0.07	0.09	0.10	0.11	0.14	0.16	0.001	0.003	0.004	0.006
		1600	0.04	0.05	0.06	0.07	0.08	0.09	0.11	0.12	0.14	0.17	0.001	0.003	0.004	0.006
		1700	0.04	0.05	0.06	0.07	0.08	0.10	0.11	0.12	0.15	0.18	0.001	0.003	0.004	0.006
		1800	0.04	0.05	0.06	0.07	0.09	0.10	0.12	0.13	0.16	0.18	0.001	0.003	0.004	0.007
		1900	0.04	0.05	0.06	0.08	0.09	0.11	0.12	0.13	0.17	0.19	0.001	0.003	0.005	0.007
		2000	0.04	0.06	0.07	0.08	0.09	0.11	0.13	0.14	0.18	0.20	0.001	0.003	0.005	0.007
		2100	0.05	0.06	0.07	0.08	0.10	0.12	0.14	0.15	0.18	0.21	0.001	0.004	0.005	0.008
		2200	0.05	0.06	0.07	0.09	0.10	0.12	0.14	0.15	0.19	0.22	0.001	0.004	0.005	0.008
		2300	0.05	0.06	0.07	0.09	0.11	0.13	0.15	0.16	0.20	0.23	0.001	0.004	0.006	0.009
		2400	0.05	0.06	0.08	0.09	0.11	0.13	0.15	0.17	0.21	0.24	0.001	0.004	0.006	0.009
		2500	0.05	0.07	0.08	0.10	0.11	0.13	0.16	0.17	0.21	0.25	0.001	0.004	0.006	0.009
		2600	0.05	0.07	0.08	0.10	0.12	0.14	0.16	0.18	0.22	0.25	0.001	0.004	0.006	0.010
		2700	0.06	0.07	0.09	0.10	0.12	0.14	0.17	0.18	0.23	0.26	0.001	0.005	0.007	0.010
		2800	0.06	0.07	0.09	0.11	0.13	0.15	0.17	0.19	0.24	0.27	0.001	0.005	0.007	0.010
		2900	0.06	0.07	0.09	0.11	0.13	0.15	0.18	0.19	0.24	0.28	0.001	0.005	0.007	0.011
		3000	0.06	0.08	0.09	0.11	0.13	0.16	0.19	0.20	0.25	0.29	0.001	0.005	0.007	0.011
		3100	0.06	0.08	0.10	0.12	0.14	0.16	0.19	0.21	0.26	0.30	0.001	0.005	0.007	0.012
		3200	0.06	0.08	0.10	0.12	0.14	0.17	0.20	0.21	0.27	0.31	0.001	0.005	0.008	0.012
		3300	0.06	0.08	0.10	0.12	0.14	0.17	0.20	0.22	0.27	0.31	0.001	0.006	0.008	0.012
		3400	0.07	0.08	0.10	0.13	0.15	0.18	0.21	0.22	0.28	0.32	0.002	0.006	0.008	0.013
		3500	0.07	0.09	0.11	0.13	0.15	0.18	0.21	0.23	0.29	0.33	0.002	0.006	0.008	0.013
		3600	0.07	0.09	0.11	0.13	0.16	0.18	0.22	0.24	0.29	0.34	0.002	0.006	0.009	0.013
		3700	0.07	0.09	0.11	0.13	0.16	0.19	0.22	0.24	0.30	0.35	0.002	0.006	0.009	0.014
		3800	0.07	0.09	0.11	0.14	0.16	0.19	0.23	0.25	0.31	0.36	0.002	0.006	0.009	0.014
		3900	0.07	0.09	0.12	0.14	0.17	0.20	0.23	0.25	0.32	0.36	0.002	0.007	0.009	0.015
		4000	0.07	0.10	0.12	0.14	0.17	0.20	0.24	0.26	0.32	0.37	0.002	0.007	0.010	0.015
		4100	0.08	0.10	0.12	0.15	0.17	0.21	0.24	0.26	0.33	0.38	0.002	0.007	0.010	0.015
		4200	0.08	0.10	0.12	0.15	0.18	0.21	0.25	0.27	0.34	0.39	0.002	0.007	0.010	0.016
		4300	0.08	0.10	0.13	0.15	0.18	0.21	0.25	0.27	0.34	0.40	0.002	0.007	0.010	0.016
		4400	0.08	0.10	0.13	0.16	0.18	0.22	0.26	0.28	0.35	0.40	0.002	0.007	0.011	0.016
		4500	0.08	0.11	0.13	0.16	0.19	0.22	0.26	0.28	0.36	0.41	0.002	0.008	0.011	0.017
		4600	0.08	0.11	0.13	0.16	0.19	0.23	0.27	0.29	0.36	0.42	0.002	0.008	0.011	0.017
		4700	0.08	0.11	0.13	0.16	0.20	0.23	0.27	0.30	0.37	0.43	0.002	0.008	0.011	0.018
		4800	0.09	0.11	0.14	0.17	0.20	0.24	0.28	0.30	0.38	0.44	0.002	0.008	0.012	0.018
		4900	0.09	0.11	0.14	0.17	0.20	0.24	0.28	0.31	0.38	0.44	0.002	0.008	0.012	0.018
		5000	0.09	0.12	0.14	0.17	0.21	0.24	0.29	0.31	0.39	0.45	0.002	0.008	0.012	0.019
		5100	0.09	0.12	0.14	0.18	0.21	0.25	0.29	0.32	0.40	0.46	0.002	0.009	0.012	0.019
		5200	0.09	0.12	0.15	0.18	0.21	0.25	0.30	0.32	0.40	0.47	0.002	0.009	0.013	0.019
		5300	0.09	0.12	0.15	0.18	0.22	0.26	0.30	0.33	0.41	0.47	0.002	0.009	0.013	0.020
		5400	0.09	0.12	0.15	0.18	0.22	0.26	0.31	0.33	0.42	0.48	0.002	0.009	0.013	0.020
		5500	0.10	0.12	0.15	0.19	0.22	0.26	0.31	0.34	0.42	0.49	0.002	0.009	0.013	0.021
		5600	0.10	0.13	0.16	0.19	0.23	0.27	0.32	0.34	0.43	0.50	0.002	0.009	0.014	0.021
		5700	0.10	0.13	0.16	0.19	0.23	0.27	0.32	0.35	0.44	0.50	0.003	0.010	0.014	0.021
		5800	0.10	0.13	0.16	0.19	0.23	0.28	0.33	0.35	0.44	0.51	0.003	0.010	0.014	0.022
	⑤	5900	0.10	0.13	0.16	0.20	0.24	0.28	0.33	0.36	0.45	0.52	0.003	0.010	0.014	0.022
		6000	0.10	0.13	0.16	0.20	0.24	0.28	0.34	0.36	0.46	0.53	0.003	0.010	0.015	0.022
									⑩							v [m/s]
									Statically balanced							Pulleys

optibelt VB

POWER RATINGS

optibelt VB PROFILE Y/6 – RAW EDGE, COGGED

NOMINAL POWER RATING P_N [kW]

FOR β = 180° AND L_d = 315 mm

Table 47

Pulleys	v [m/s]	n_k [min⁻¹]	Datum diameter of small pulley d_{dk} [mm] 20	22.4	25	28	31.5	35.5	40	45	50	56	Additional power [kW] per belt for speed ratio i 1.01 to 1.05	1.06 to 1.26	1.27 to 1.57	> 1.57
Statically balanced	②	**700**	0.03	0.03	0.04	0.05	0.06	0.08	0.09	0.11	0.12	0.14	0.001	0.003	0.005	0.008
		950	0.03	0.04	0.05	0.07	0.08	0.10	0.12	0.14	0.16	0.18	0.001	0.005	0.007	0.011
		1450	0.05	0.06	0.08	0.10	0.12	0.15	0.17	0.20	0.24	0.27	0.002	0.007	0.010	0.016
		2850	0.08	0.11	0.14	0.18	0.22	0.27	0.32	0.38	0.43	0.50	0.004	0.014	0.020	0.032
		200	0.01	0.01	0.01	0.02	0.02	0.02	0.03	0.03	0.04	0.04	0.000	0.001	0.001	0.002
		300	0.01	0.02	0.02	0.02	0.03	0.03	0.04	0.05	0.06	0.06	0.000	0.001	0.002	0.003
		400	0.02	0.02	0.03	0.03	0.04	0.05	0.05	0.06	0.07	0.08	0.001	0.002	0.003	0.004
		500	0.02	0.02	0.03	0.04	0.05	0.06	0.07	0.08	0.09	0.10	0.001	0.002	0.004	0.006
		600	0.02	0.03	0.04	0.04	0.05	0.07	0.08	0.09	0.10	0.12	0.001	0.003	0.004	0.007
		700	0.03	0.03	0.04	0.05	0.06	0.08	0.09	0.11	0.12	0.14	0.001	0.003	0.005	0.008
		800	0.03	0.04	0.05	0.06	0.07	0.08	0.10	0.12	0.14	0.16	0.001	0.004	0.006	0.009
		900	0.03	0.04	0.05	0.06	0.08	0.09	0.11	0.13	0.15	0.18	0.001	0.004	0.006	0.010
		1000	0.03	0.04	0.06	0.07	0.09	0.10	0.12	0.15	0.17	0.19	0.001	0.005	0.007	0.011
		1100	0.04	0.05	0.06	0.08	0.09	0.11	0.14	0.16	0.18	0.21	0.001	0.005	0.008	0.012
		1200	0.04	0.05	0.07	0.08	0.10	0.12	0.15	0.17	0.20	0.23	0.002	0.006	0.009	0.013
		1300	0.04	0.06	0.07	0.09	0.11	0.13	0.16	0.19	0.21	0.25	0.002	0.006	0.009	0.014
		1400	0.04	0.06	0.08	0.09	0.12	0.14	0.17	0.20	0.23	0.26	0.002	0.007	0.010	0.016
		1500	0.05	0.06	0.08	0.10	0.12	0.15	0.18	0.21	0.24	0.28	0.002	0.007	0.011	0.017
		1600	0.05	0.07	0.09	0.11	0.13	0.16	0.19	0.22	0.26	0.30	0.002	0.008	0.011	0.018
		1700	0.05	0.07	0.09	0.11	0.14	0.17	0.20	0.24	0.27	0.31	0.002	0.008	0.012	0.019
		1800	0.05	0.07	0.09	0.12	0.15	0.18	0.21	0.25	0.29	0.33	0.002	0.009	0.013	0.020
		1900	0.06	0.08	0.10	0.12	0.15	0.19	0.22	0.26	0.30	0.35	0.003	0.009	0.014	0.021
		2000	0.06	0.08	0.10	0.13	0.16	0.19	0.23	0.27	0.32	0.36	0.003	0.010	0.014	0.022
		2100	0.06	0.08	0.11	0.14	0.17	0.20	0.24	0.29	0.33	0.38	0.003	0.010	0.015	0.023
		2200	0.06	0.09	0.11	0.14	0.17	0.21	0.25	0.30	0.34	0.40	0.003	0.011	0.016	0.024
		2300	0.07	0.09	0.12	0.15	0.18	0.22	0.26	0.31	0.36	0.41	0.003	0.011	0.016	0.026
		2400	0.07	0.09	0.12	0.15	0.19	0.23	0.27	0.32	0.37	0.43	0.003	0.012	0.017	0.027
		2500	0.07	0.10	0.13	0.16	0.19	0.24	0.28	0.33	0.38	0.44	0.003	0.012	0.018	0.028
		2600	0.07	0.10	0.13	0.16	0.20	0.24	0.29	0.35	0.40	0.46	0.003	0.013	0.019	0.029
		2700	0.08	0.10	0.13	0.17	0.21	0.25	0.30	0.36	0.41	0.48	0.004	0.013	0.019	0.030
		2800	0.08	0.11	0.14	0.17	0.22	0.26	0.31	0.37	0.43	0.49	0.004	0.014	0.020	0.031
		2900	0.08	0.11	0.14	0.18	0.22	0.27	0.32	0.38	0.44	0.51	0.004	0.014	0.021	0.032
		3000	0.08	0.11	0.15	0.18	0.23	0.28	0.33	0.39	0.45	0.52	0.004	0.015	0.021	0.033
		3100	0.09	0.12	0.15	0.19	0.24	0.29	0.34	0.40	0.47	0.54	0.004	0.015	0.022	0.034
		3200	0.09	0.12	0.16	0.20	0.24	0.29	0.35	0.42	0.48	0.55	0.004	0.016	0.023	0.036
		3300	0.09	0.12	0.16	0.20	0.25	0.30	0.36	0.43	0.49	0.57	0.004	0.016	0.024	0.037
		3400	0.09	0.13	0.16	0.21	0.25	0.31	0.37	0.44	0.50	0.58	0.004	0.017	0.024	0.038
		3500	0.09	0.13	0.17	0.21	0.26	0.32	0.38	0.45	0.52	0.60	0.005	0.017	0.025	0.039
		3600	0.10	0.13	0.17	0.22	0.27	0.33	0.39	0.46	0.53	0.61	0.005	0.018	0.026	0.040
		3700	0.10	0.14	0.18	0.22	0.27	0.33	0.40	0.47	0.54	0.62	0.005	0.018	0.026	0.041
		3800	0.10	0.14	0.18	0.23	0.28	0.34	0.41	0.48	0.55	0.64	0.005	0.019	0.027	0.042
		3900	0.10	0.14	0.18	0.23	0.29	0.35	0.42	0.49	0.57	0.65	0.005	0.019	0.028	0.043
		4000	0.10	0.14	0.19	0.24	0.29	0.36	0.43	0.50	0.58	0.67	0.005	0.020	0.029	0.044
		4100	0.11	0.15	0.19	0.24	0.30	0.36	0.44	0.51	0.59	0.68	0.005	0.020	0.029	0.045
		4200	0.11	0.15	0.19	0.25	0.31	0.37	0.44	0.52	0.60	0.69	0.006	0.021	0.030	0.047
		4300	0.11	0.15	0.20	0.25	0.31	0.38	0.45	0.54	0.61	0.71	0.006	0.021	0.031	0.048
		4400	0.11	0.16	0.20	0.26	0.32	0.39	0.46	0.55	0.63	0.72	0.006	0.022	0.031	0.049
		4500	0.11	0.16	0.21	0.26	0.32	0.39	0.47	0.56	0.64	0.73	0.006	0.022	0.032	0.050
		4600	0.12	0.16	0.21	0.27	0.33	0.40	0.48	0.57	0.65	0.75	0.006	0.023	0.033	0.051
	⑤	4700	0.12	0.16	0.21	0.27	0.34	0.41	0.49	0.58	0.66	0.76	0.006	0.023	0.034	0.052
		4800	0.12	0.17	0.22	0.28	0.34	0.42	0.50	0.59	0.67	0.77	0.006	0.024	0.034	0.053
		4900	0.12	0.17	0.22	0.28	0.35	0.42	0.51	0.60	0.68	0.79	0.006	0.024	0.035	0.054
		5000	0.12	0.17	0.22	0.28	0.35	0.43	0.51	0.61	0.70	0.80	0.007	0.025	0.036	0.055
		5100	0.12	0.17	0.23	0.29	0.36	0.44	0.52	0.62	0.71	0.81	0.007	0.025	0.037	0.057
		5200	0.13	0.18	0.23	0.29	0.36	0.44	0.53	0.63	0.72	0.82	0.007	0.026	0.037	0.058
		5300	0.13	0.18	0.24	0.30	0.37	0.45	0.54	0.64	0.73	0.84	0.007	0.026	0.038	0.059
		5400	0.13	0.18	0.24	0.30	0.38	0.46	0.55	0.65	0.74	0.85	0.007	0.027	0.039	0.060
		5500	0.13	0.19	0.24	0.31	0.38	0.47	0.56	0.65	0.75	0.86	0.007	0.027	0.039	0.061
		5600	0.13	0.19	0.25	0.31	0.39	0.47	0.56	0.66	0.76	0.87	0.007	0.028	0.040	0.062
		5700	0.14	0.19	0.25	0.32	0.39	0.48	0.57	0.67	0.77	0.88	0.008	0.028	0.041	0.063
		5800	0.14	0.19	0.25	0.32	0.40	0.49	0.58	0.68	0.78	0.89	0.008	0.029	0.042	0.064
		5900	0.14	0.20	0.26	0.33	0.40	0.49	0.59	0.69	0.79	0.90	0.008	0.029	0.042	0.065
		6000	0.14	0.20	0.26	0.33	0.41	0.50	0.60	0.70	0.80	0.91	0.008	0.030	0.043	0.067
							⑩			⑮			v [m/s]			
							Statically balanced						Pulleys			

optibelt VB

POWER RATINGS

optibelt VB PROFILE 8

NOMINAL POWER RATING P_N [kW]

FOR β = 180° AND L_d = 579 mm

Table 48

Pulleys	v [m/s]	n_k [min⁻¹]	Datum diameter of small pulley d_{dk} [mm] 35	40	45	50	56	63	71	80	90	Additional power [kW] per belt for speed ratio i 1.01 to 1.05	1.06 to 1.26	1.27 to 1.57	> 1.57
Statically balanced	②	**700**	0.12	0.15	0.18	0.21	0.25	0.29	0.34	0.39	0.45	0.00	0.01	0.01	0.01
		950	0.15	0.19	0.23	0.27	0.32	0.37	0.43	0.50	0.57	0.00	0.01	0.02	0.02
		1450	0.19	0.25	0.31	0.37	0.43	0.51	0.59	0.69	0.79	0.00	0.02	0.03	0.03
		2850	0.28	0.38	0.48	0.57	0.69	0.81	0.95	1.11	1.27	0.01	0.03	0.05	0.06
		100	0.03	0.03	0.04	0.04	0.05	0.06	0.07	0.08	0.09	0.00	0.00	0.00	0.00
		200	0.05	0.06	0.07	0.08	0.09	0.11	0.12	0.14	0.16	0.00	0.00	0.00	0.00
		300	0.06	0.08	0.09	0.11	0.13	0.15	0.17	0.20	0.23	0.00	0.00	0.01	0.01
		400	0.08	0.10	0.12	0.14	0.16	0.19	0.22	0.25	0.28	0.00	0.00	0.01	0.01
		500	0.09	0.12	0.14	0.16	0.19	0.22	0.26	0.30	0.34	0.00	0.01	0.01	0.01
		600	0.11	0.13	0.16	0.19	0.22	0.26	0.30	0.35	0.40	0.00	0.01	0.01	0.01
		700	0.12	0.15	0.18	0.21	0.25	0.29	0.34	0.39	0.45	0.00	0.01	0.01	0.01
		800	0.13	0.17	0.20	0.24	0.28	0.32	0.38	0.43	0.50	0.00	0.01	0.01	0.02
		900	0.14	0.18	0.22	0.26	0.30	0.35	0.41	0.48	0.55	0.00	0.01	0.02	0.02
		1000	0.15	0.19	0.24	0.28	0.33	0.38	0.45	0.52	0.59	0.00	0.01	0.02	0.02
	⑤	1100	0.16	0.21	0.25	0.30	0.35	0.41	0.48	0.56	0.64	0.00	0.01	0.02	0.02
		1200	0.17	0.22	0.27	0.32	0.38	0.44	0.51	0.59	0.68	0.00	0.01	0.02	0.02
		1300	0.18	0.23	0.29	0.34	0.40	0.47	0.55	0.63	0.72	0.00	0.02	0.02	0.03
		1400	0.19	0.24	0.30	0.36	0.42	0.49	0.58	0.67	0.77	0.00	0.02	0.03	0.03
		1500	0.20	0.26	0.32	0.37	0.44	0.52	0.61	0.70	0.81	0.00	0.02	0.03	0.03
		1600	0.20	0.27	0.33	0.39	0.46	0.55	0.64	0.74	0.85	0.00	0.02	0.03	0.03
		1700	0.21	0.28	0.34	0.41	0.48	0.57	0.67	0.77	0.88	0.00	0.02	0.03	0.04
		1800	0.22	0.29	0.36	0.42	0.50	0.59	0.69	0.80	0.92	0.00	0.02	0.03	0.04
		1900	0.22	0.30	0.37	0.44	0.52	0.62	0.72	0.84	0.96	0.00	0.02	0.04	0.04
		2000	0.23	0.31	0.38	0.46	0.54	0.64	0.75	0.87	0.99	0.00	0.02	0.04	0.04
		2100	0.24	0.32	0.40	0.47	0.56	0.66	0.77	0.90	1.03	0.00	0.02	0.04	0.04
		2200	0.24	0.33	0.41	0.49	0.58	0.68	0.80	0.93	1.06	0.01	0.03	0.04	0.05
		2300	0.25	0.34	0.42	0.50	0.60	0.70	0.83	0.96	1.10	0.01	0.03	0.04	0.05
		2400	0.25	0.34	0.43	0.51	0.61	0.73	0.85	0.98	1.13	0.01	0.03	0.04	0.05
		2500	0.26	0.35	0.44	0.53	0.63	0.75	0.87	1.01	1.16	0.01	0.03	0.05	0.05
	⑩	2600	0.27	0.36	0.45	0.54	0.65	0.77	0.90	1.04	1.19	0.01	0.03	0.05	0.05
		2700	0.27	0.37	0.46	0.56	0.66	0.79	0.92	1.07	1.22	0.01	0.03	0.05	0.06
		2800	0.27	0.38	0.47	0.57	0.68	0.80	0.94	1.09	1.25	0.01	0.03	0.05	0.06
		2900	0.28	0.38	0.48	0.58	0.69	0.82	0.96	1.12	1.28	0.01	0.03	0.05	0.06
		3000	0.28	0.39	0.49	0.59	0.71	0.84	0.99	1.14	1.31	0.01	0.03	0.06	0.06
		3100	0.29	0.40	0.50	0.60	0.72	0.86	1.01	1.17	1.34	0.01	0.04	0.06	0.06
		3200	0.29	0.40	0.51	0.62	0.74	0.88	1.03	1.19	1.36	0.01	0.04	0.06	0.07
		3300	0.30	0.41	0.52	0.63	0.75	0.89	1.05	1.21	1.39	0.01	0.04	0.06	0.07
		3400	0.30	0.42	0.53	0.64	0.77	0.91	1.07	1.24	1.41	0.01	0.04	0.06	0.07
		3500	0.30	0.42	0.54	0.65	0.78	0.93	1.09	1.26	1.44	0.01	0.04	0.06	0.07
		3600	0.31	0.43	0.55	0.66	0.79	0.94	1.10	1.28	1.46	0.01	0.04	0.07	0.07
		3700	0.31	0.43	0.55	0.67	0.81	0.96	1.12	1.30	1.49	0.01	0.04	0.07	0.08
		3800	0.31	0.44	0.56	0.68	0.82	0.97	1.14	1.32	1.51	0.01	0.04	0.07	0.08
		3900	0.31	0.44	0.57	0.69	0.83	0.99	1.16	1.34	1.53	0.01	0.05	0.07	0.08
		4000	0.32	0.45	0.58	0.70	0.84	1.00	1.17	1.36	1.55	0.01	0.05	0.07	0.08
		4100	0.32	0.45	0.58	0.71	0.85	1.02	1.19	1.38	1.57	0.01	0.05	0.08	0.09
		4200	0.32	0.46	0.59	0.72	0.86	1.03	1.21	1.40	1.59	0.01	0.05	0.08	0.09
		4300	0.32	0.46	0.60	0.73	0.88	1.04	1.22	1.41	1.61	0.01	0.05	0.08	0.09
		4400	0.33	0.47	0.60	0.73	0.89	1.06	1.24	1.43	1.63	0.01	0.05	0.08	0.09
		4500	0.33	0.47	0.61	0.74	0.90	1.07	1.25	1.45	1.65	0.01	0.05	0.08	0.09
		4600	0.33	0.48	0.62	0.75	0.91	1.08	1.27	1.46	1.66	0.01	0.05	0.09	0.10
		4700	0.33	0.48	0.62	0.76	0.92	1.09	1.28	1.48	1.68	0.01	0.05	0.09	0.10
		4800	0.33	0.48	0.63	0.77	0.93	1.10	1.29	1.49	1.69	0.01	0.06	0.09	0.10
		4900	0.33	0.49	0.63	0.77	0.94	1.11	1.31	1.51	1.71	0.01	0.06	0.09	0.10
		5000	0.34	0.49	0.64	0.78	0.94	1.13	1.32	1.52	1.72	0.01	0.06	0.09	0.10
		5100	0.34	0.49	0.64	0.79	0.95	1.14	1.33	1.53	1.74	0.01	0.06	0.09	0.11
		5200	0.34	0.50	0.65	0.79	0.96	1.15	1.34	1.55	1.75	0.01	0.06	0.10	0.11
		5300	0.34	0.50	0.65	0.80	0.97	1.16	1.35	1.56	1.76	0.01	0.06	0.10	0.11
		5400	0.34	0.50	0.66	0.81	0.98	1.17	1.36	1.57	1.77	0.01	0.06	0.10	0.11
		5500	0.34	0.51	0.66	0.81	0.99	1.17	1.38	1.58	1.78	0.01	0.06	0.10	0.11
		5600	0.34	0.51	0.67	0.82	0.99	1.18	1.38	1.59	1.79	0.01	0.06	0.10	0.12
		5700	0.34	0.51	0.67	0.83	1.00	1.19	1.39	1.60	1.80	0.01	0.07	0.11	0.12
		5800	0.34	0.51	0.68	0.83	1.01	1.20	1.40	1.61	1.81	0.01	0.07	0.11	0.12
		5900	0.34	0.51	0.68	0.84	1.01	1.21	1.41	1.62	1.82	0.01	0.07	0.11	0.12
		6000	0.34	0.52	0.68	0.84	1.02	1.22	1.42	1.63	1.82	0.01	0.07	0.11	0.12
		6200	0.34	0.52	0.69	0.85	1.03	1.23	1.43	1.64	1.83	0.01	0.07	0.11	0.13
		6400	0.34	0.52	0.69	0.86	1.04	1.24	1.45	1.65	1.84	0.01	0.07	0.12	0.13
		6600	0.34	0.52	0.70	0.87	1.05	1.25	1.46	1.66	1.84	0.02	0.08	0.12	0.14
		6800	0.34	0.53	0.70	0.87	1.06	1.26	1.47	1.67	1.84	0.02	0.08	0.13	0.14
		7000	0.34	0.53	0.71	0.88	1.07	1.27	1.48	1.67	1.84	0.02	0.08	0.13	0.15
		7200	0.33	0.53	0.71	0.88	1.07	1.28	1.48	1.67	1.84	0.02	0.08	0.13	0.15
		7400	0.33	0.53	0.71	0.89	1.08	1.28	1.48	1.67	1.83	0.02	0.09	0.14	0.15
		7600	0.33	0.53	0.72	0.89	1.08	1.29	1.49	1.67	1.81	0.02	0.09	0.14	0.16
		7800	0.32	0.53	0.72	0.89	1.09	1.29	1.49	1.66	1.80	0.02	0.09	0.14	0.16
		8000	0.32	0.52	0.72	0.89	1.09	1.29	1.48	1.65	1.78	0.02	0.09	0.15	0.17
			⑮		⑳		㉕		㉚			v [m/s]			
									Dynamically balanced			Pulleys			

v > 30 m/s. Please consult our Application Engineering Department.

optibelt VB

POWER RATINGS

optibelt VB PROFILE Z/10

NOMINAL POWER RATING P_N [kW]

FOR β = 180° AND L_d = 822 mm

Table 49

Pulleys	v [m/s]	n_k [min⁻¹]	Datum diameter of small pulley d_{dk} [mm] 45	50	56	63	71	80	90	100	112	Additional power [kW] per belt for speed ratio i 1.01 to 1.05	1.06 to 1.26	1.27 to 1.57	> 1.57
Statically balanced		**700**	0.18	0.22	0.28	0.34	0.42	0.50	0.59	0.67	0.77	0.00	0.02	0.03	0.03
		950	0.22	0.28	0.35	0.44	0.53	0.64	0.75	0.86	1.00	0.00	0.02	0.04	0.04
		1450	0.29	0.38	0.48	0.60	0.74	0.89	1.06	1.22	1.40	0.01	0.03	0.06	0.06
		2850	0.42	0.58	0.77	0.98	1.22	1.47	1.75	2.02	2.33	0.01	0.07	0.11	0.12
		100	0.04	0.05	0.06	0.07	0.08	0.10	0.11	0.13	0.15	0.00	0.00	0.00	0.00
		200	0.07	0.08	0.10	0.12	0.15	0.17	0.20	0.23	0.27	0.00	0.00	0.01	0.01
		300	0.09	0.12	0.14	0.17	0.21	0.25	0.29	0.33	0.38	0.00	0.01	0.01	0.01
		400	0.12	0.15	0.18	0.22	0.26	0.31	0.37	0.42	0.48	0.00	0.01	0.02	0.02
		500	0.14	0.17	0.21	0.26	0.32	0.38	0.44	0.51	0.58	0.00	0.01	0.02	0.02
		600	0.16	0.20	0.25	0.30	0.37	0.44	0.51	0.59	0.68	0.00	0.01	0.02	0.03
		700	0.18	0.22	0.28	0.34	0.42	0.50	0.59	0.67	0.77	0.00	0.02	0.03	0.03
		800	0.19	0.25	0.31	0.38	0.46	0.55	0.65	0.75	0.87	0.00	0.02	0.03	0.03
	2	900	0.21	0.27	0.34	0.42	0.51	0.61	0.72	0.83	0.95	0.00	0.02	0.03	0.04
		1000	0.23	0.29	0.37	0.45	0.55	0.66	0.78	0.90	1.04	0.00	0.02	0.04	0.04
		1100	0.24	0.31	0.39	0.49	0.60	0.72	0.85	0.97	1.12	0.01	0.03	0.04	0.05
		1200	0.25	0.33	0.42	0.52	0.64	0.77	0.91	1.05	1.21	0.01	0.03	0.05	0.05
		1300	0.27	0.35	0.45	0.56	0.68	0.82	0.97	1.11	1.29	0.01	0.03	0.05	0.06
		1400	0.28	0.37	0.47	0.59	0.72	0.87	1.03	1.18	1.37	0.01	0.03	0.05	0.06
		1500	0.29	0.39	0.49	0.62	0.76	0.91	1.08	1.25	1.44	0.01	0.04	0.06	0.06
		1600	0.31	0.40	0.52	0.65	0.80	0.96	1.14	1.31	1.52	0.01	0.04	0.06	0.07
		1700	0.32	0.42	0.54	0.68	0.84	1.01	1.19	1.38	1.59	0.01	0.04	0.07	0.07
		1800	0.33	0.44	0.56	0.71	0.87	1.05	1.25	1.44	1.66	0.01	0.04	0.07	0.08
		1900	0.34	0.45	0.59	0.74	0.91	1.10	1.30	1.50	1.73	0.01	0.05	0.07	0.08
		2000	0.35	0.47	0.61	0.77	0.94	1.14	1.35	1.56	1.80	0.01	0.05	0.08	0.09
		2100	0.36	0.48	0.63	0.79	0.98	1.18	1.40	1.62	1.87	0.01	0.05	0.08	0.09
	5	2200	0.37	0.50	0.65	0.82	1.01	1.22	1.45	1.68	1.94	0.01	0.05	0.08	0.10
		2300	0.38	0.51	0.67	0.85	1.05	1.26	1.50	1.73	2.00	0.01	0.06	0.09	0.10
		2400	0.39	0.52	0.69	0.87	1.08	1.30	1.55	1.79	2.06	0.01	0.06	0.09	0.10
		2500	0.39	0.54	0.70	0.90	1.11	1.34	1.60	1.84	2.12	0.01	0.06	0.10	0.11
		2600	0.40	0.55	0.72	0.92	1.14	1.38	1.64	1.89	2.18	0.01	0.06	0.10	0.11
		2700	0.41	0.56	0.74	0.94	1.17	1.42	1.69	1.94	2.24	0.01	0.06	0.10	0.12
		2800	0.42	0.57	0.76	0.97	1.20	1.46	1.73	1.99	2.30	0.01	0.07	0.11	0.12
		2900	0.42	0.59	0.77	0.99	1.23	1.49	1.77	2.04	2.35	0.01	0.07	0.11	0.13
		3000	0.43	0.60	0.79	1.01	1.26	1.53	1.81	2.09	2.41	0.01	0.07	0.12	0.13
		3100	0.44	0.61	0.81	1.03	1.29	1.56	1.85	2.14	2.46	0.01	0.07	0.12	0.13
		3200	0.44	0.62	0.82	1.06	1.31	1.59	1.89	2.18	2.51	0.02	0.08	0.12	0.14
		3300	0.45	0.63	0.84	1.08	1.34	1.63	1.93	2.22	2.56	0.02	0.08	0.13	0.14
		3400	0.46	0.64	0.85	1.10	1.37	1.66	1.97	2.27	2.60	0.02	0.08	0.13	0.15
		3500	0.46	0.65	0.87	1.12	1.39	1.69	2.01	2.31	2.65	0.02	0.08	0.13	0.15
		3600	0.47	0.66	0.88	1.14	1.42	1.72	2.04	2.35	2.69	0.02	0.09	0.14	0.16
		3700	0.47	0.67	0.90	1.15	1.44	1.75	2.08	2.39	2.74	0.02	0.09	0.14	0.16
		3800	0.48	0.68	0.91	1.17	1.46	1.78	2.11	2.42	2.78	0.02	0.09	0.15	0.16
		3900	0.48	0.68	0.92	1.19	1.49	1.81	2.14	2.46	2.81	0.02	0.09	0.15	0.17
		4000	0.48	0.69	0.93	1.21	1.51	1.83	2.17	2.49	2.85	0.02	0.10	0.15	0.17
		4100	0.49	0.70	0.95	1.22	1.53	1.86	2.20	2.53	2.89	0.02	0.10	0.16	0.18
	10	4200	0.49	0.71	0.96	1.24	1.55	1.89	2.23	2.56	2.92	0.02	0.10	0.16	0.18
		4300	0.49	0.71	0.97	1.26	1.57	1.91	2.26	2.59	2.95	0.02	0.10	0.17	0.19
		4400	0.50	0.72	0.98	1.27	1.59	1.93	2.29	2.62	2.98	0.02	0.11	0.17	0.19
		4500	0.50	0.73	0.99	1.29	1.61	1.96	2.32	2.65	3.01	0.02	0.11	0.17	0.19
		4600	0.50	0.73	1.00	1.30	1.63	1.98	2.34	2.67	3.04	0.02	0.11	0.18	0.20
		4700	0.50	0.74	1.01	1.32	1.65	2.00	2.37	2.70	3.06	0.02	0.11	0.18	0.20
		4800	0.51	0.74	1.02	1.33	1.67	2.02	2.39	2.72	3.08	0.02	0.12	0.18	0.21
		4900	0.51	0.75	1.03	1.34	1.68	2.04	2.41	2.75	3.10	0.02	0.12	0.19	0.21
		5000	0.51	0.75	1.04	1.35	1.70	2.06	2.43	2.77	3.12	0.02	0.12	0.19	0.22
		5100	0.51	0.76	1.05	1.37	1.71	2.08	2.45	2.79	3.14	0.02	0.12	0.20	0.22
		5200	0.51	0.76	1.05	1.38	1.73	2.10	2.47	2.80	3.15	0.03	0.13	0.20	0.23
		5300	0.51	0.77	1.06	1.39	1.74	2.11	2.49	2.82	3.16	0.03	0.13	0.20	0.23
		5400	0.51	0.77	1.07	1.40	1.76	2.13	2.50	2.83	3.17	0.03	0.13	0.21	0.23
		5500	0.51	0.77	1.08	1.41	1.77	2.14	2.52	2.85	3.18	0.03	0.13	0.21	0.24
		5600	0.51	0.78	1.08	1.42	1.78	2.16	2.53	2.86	3.19	0.03	0.13	0.22	0.24
		5800	0.51	0.78	1.09	1.44	1.80	2.18	2.56	2.88	3.19	0.03	0.14	0.22	0.25
		6000	0.51	0.79	1.10	1.45	1.82	2.20	2.57	2.89	3.19	0.03	0.14	0.23	0.26
		6200	0.51	0.79	1.11	1.47	1.84	2.22	2.59	2.90	3.18	0.03	0.15	0.24	0.27
	15	6400	0.50	0.79	1.12	1.48	1.85	2.23	2.60	2.89	3.15	0.03	0.15	0.25	0.28
		6600	0.50	0.79	1.12	1.49	1.86	2.24	2.60	2.88	3.12	0.03	0.16	0.25	0.29
		6800	0.49	0.79	1.13	1.49	1.87	2.25	2.60	2.87	3.08	0.03	0.16	0.26	0.29
		7000	0.49	0.79	1.13	1.50	1.88	2.25	2.59	2.85	3.03	0.03	0.17	0.27	0.30
		7200	0.48	0.78	1.13	1.50	1.88	2.25	2.58	2.82	2.97	0.03	0.17	0.28	0.31
		7400	0.47	0.78	1.13	1.50	1.88	2.24	2.56	2.78	2.90	0.04	0.18	0.28	0.32
		7600	0.46	0.77	1.12	1.50	1.88	2.23	2.53			0.04	0.18	0.29	0.33
		7800	0.45	0.77	1.12	1.49	1.87	2.22	2.50			0.04	0.19	0.30	0.34
		8000	0.44	0.76	1.11	1.49	1.86	2.20	2.47			0.04	0.19	0.31	0.35
		8200	0.42	0.75	1.11	1.48	1.85	2.17				0.04	0.20	0.32	0.35
		8400	0.41	0.74	1.10	1.47	1.83	2.15				0.04	0.20	0.32	0.36
			20		25	30						v [m/s]			
							Dynamically balanced (for details see DIN 2211)					Pulleys			

v > 30 m/s. Please consult our Application Engineering Department.

optibelt VB

POWER RATINGS

optibelt VB PROFILE A/13

NOMINAL POWER RATING P_N [kW]

FOR β = 180° AND L_d = 1730 mm

Table 50

Pulleys	v [m/s]	n_k [min⁻¹]	Datum diameter of small pulley d_{dk} [mm] 71	80	90	95	100	106	112	118	125	132	140	150	160	180	Additional power [kW] per belt for speed ratio i 1.01 to 1.05	1.06 to 1.26	1.27 to 1.57	> 1.57
Statically balanced		**700**	0.52	0.74	0.97	1.09	1.21	1.35	1.48	1.62	1.78	1.94	2.12	2.34	2.56	2.99	0.02	0.08	0.12	0.14
		950	0.63	0.92	1.23	1.38	1.53	1.71	1.89	2.07	2.28	2.49	2.72	3.01	3.29	3.85	0.02	0.10	0.16	0.18
		1450	0.81	1.22	1.67	1.89	2.11	2.37	2.62	2.88	3.17	3.46	3.79	4.19	4.59	5.36	0.03	0.16	0.25	0.28
		2850	1.04	1.75	2.51	2.88	3.25	3.67	4.09	4.50	4.96	5.41	5.90	6.48	7.03	8.03	0.06	0.31	0.49	0.55
		100	0.12	0.16	0.20	0.22	0.24	0.26	0.29	0.31	0.34	0.37	0.40	0.44	0.48	0.55	0.00	0.01	0.02	0.02
		200	0.21	0.28	0.36	0.39	0.43	0.48	0.52	0.57	0.62	0.67	0.73	0.80	0.87	1.02	0.00	0.02	0.03	0.04
		300	0.29	0.39	0.50	0.55	0.61	0.67	0.74	0.80	0.88	0.95	1.03	1.14	1.24	1.45	0.01	0.03	0.05	0.06
		400	0.35	0.48	0.63	0.70	0.77	0.85	0.94	1.02	1.12	1.21	1.32	1.46	1.59	1.86	0.01	0.04	0.07	0.08
		500	0.41	0.57	0.75	0.84	0.92	1.02	1.13	1.23	1.35	1.46	1.60	1.76	1.93	2.25	0.01	0.05	0.09	0.10
	②	600	0.47	0.66	0.86	0.97	1.07	1.19	1.31	1.43	1.57	1.71	1.86	2.06	2.25	2.63	0.01	0.06	0.10	0.12
		700	0.52	0.74	0.97	1.09	1.21	1.35	1.48	1.62	1.78	1.94	2.12	2.34	2.56	2.99	0.02	0.08	0.12	0.14
		800	0.57	0.81	1.08	1.21	1.34	1.50	1.65	1.81	1.99	2.16	2.36	2.61	2.86	3.34	0.02	0.09	0.14	0.16
		900	0.61	0.88	1.18	1.32	1.47	1.64	1.82	1.99	2.18	2.38	2.60	2.88	3.15	3.69	0.02	0.10	0.16	0.18
		1000	0.65	0.95	1.27	1.44	1.59	1.78	1.97	2.16	2.38	2.59	2.83	3.13	3.43	4.01	0.02	0.11	0.17	0.19
		1100	0.69	1.01	1.37	1.54	1.71	1.92	2.13	2.33	2.56	2.79	3.06	3.38	3.70	4.33	0.02	0.12	0.19	0.21
		1200	0.73	1.08	1.46	1.64	1.83	2.05	2.27	2.49	2.74	2.99	3.28	3.62	3.97	4.64	0.03	0.13	0.21	0.23
		1300	0.76	1.14	1.54	1.74	1.94	2.18	2.42	2.65	2.92	3.19	3.49	3.86	4.22	4.94	0.03	0.14	0.22	0.25
	⑤	1400	0.79	1.19	1.63	1.84	2.05	2.30	2.55	2.80	3.09	3.37	3.69	4.08	4.47	5.22	0.03	0.15	0.24	0.27
		1500	0.82	1.24	1.71	1.93	2.16	2.42	2.69	2.95	3.25	3.55	3.89	4.30	4.71	5.50	0.03	0.16	0.26	0.29
		1600	0.85	1.30	1.78	2.02	2.26	2.54	2.82	3.10	3.41	3.73	4.08	4.51	4.94	5.76	0.03	0.17	0.28	0.31
		1700	0.88	1.34	1.86	2.11	2.36	2.65	2.95	3.23	3.57	3.90	4.26	4.72	5.16	6.02	0.04	0.18	0.29	0.33
		1800	0.90	1.39	1.93	2.19	2.45	2.76	3.07	3.37	3.72	4.06	4.44	4.91	5.37	6.26	0.04	0.19	0.31	0.35
		1900	0.92	1.44	2.00	2.27	2.54	2.87	3.19	3.50	3.86	4.22	4.62	5.10	5.58	6.49	0.04	0.21	0.33	0.37
		2000	0.94	1.48	2.06	2.35	2.63	2.97	3.30	3.62	4.00	4.37	4.78	5.28	5.77	6.71	0.04	0.22	0.35	0.39
		2100	0.96	1.52	2.12	2.42	2.72	3.06	3.41	3.75	4.13	4.51	4.94	5.46	5.96	6.91	0.05	0.23	0.36	0.41
		2200	0.97	1.55	2.18	2.49	2.80	3.16	3.51	3.86	4.26	4.65	5.09	5.62	6.13	7.10	0.05	0.24	0.38	0.43
		2300	0.99	1.59	2.24	2.56	2.88	3.25	3.61	3.97	4.38	4.79	5.23	5.78	6.30	7.28	0.05	0.25	0.40	0.45
		2400	1.00	1.62	2.30	2.63	2.95	3.33	3.71	4.08	4.50	4.91	5.37	5.93	6.46	7.45	0.05	0.26	0.42	0.47
		2500	1.01	1.66	2.35	2.69	3.02	3.42	3.80	4.18	4.61	5.03	5.50	6.06	6.60	7.60	0.05	0.27	0.43	0.49
		2600	1.02	1.68	2.40	2.75	3.09	3.50	3.89	4.28	4.72	5.15	5.62	6.20	6.74	7.74	0.06	0.28	0.45	0.51
		2700	1.03	1.71	2.45	2.80	3.16	3.57	3.98	4.37	4.82	5.26	5.74	6.32	6.86	7.87	0.06	0.29	0.47	0.53
	⑩	2800	1.04	1.74	2.49	2.86	3.22	3.64	4.05	4.46	4.92	5.36	5.85	6.43	6.98	7.98	0.06	0.30	0.48	0.54
		2900	1.04	1.76	2.53	2.91	3.28	3.71	4.13	4.54	5.01	5.45	5.95	6.53	7.08	8.07	0.06	0.31	0.50	0.56
		3000	1.04	1.78	2.57	2.95	3.33	3.77	4.20	4.62	5.09	5.54	6.04	6.63	7.18	8.15	0.06	0.32	0.52	0.58
		3100	1.04	1.80	2.61	3.00	3.38	3.83	4.27	4.69	5.17	5.62	6.12	6.71	7.26	8.21	0.07	0.34	0.54	0.60
		3200	1.04	1.81	2.64	3.04	3.43	3.88	4.33	4.75	5.24	5.70	6.20	6.79	7.33	8.26	0.07	0.35	0.55	0.62
		3300	1.04	1.83	2.67	3.08	3.47	3.93	4.38	4.82	5.30	5.76	6.27	6.85	7.38	8.29	0.07	0.36	0.57	0.64
		3400	1.04	1.84	2.70	3.11	3.51	3.98	4.43	4.87	5.36	5.82	6.32	6.90	7.43	8.30	0.07	0.37	0.59	0.66
		3500	1.03	1.85	2.72	3.14	3.55	4.02	4.48	4.92	5.41	5.87	6.37	6.95	7.46	8.30	0.08	0.38	0.61	0.68
		3600	1.02	1.86	2.74	3.17	3.58	4.06	4.52	4.96	5.45	5.92	6.41	6.98	7.48		0.08	0.39	0.62	0.70
		3700	1.01	1.86	2.76	3.19	3.61	4.09	4.56	5.00	5.49	5.95	6.44	7.00	7.48		0.08	0.40	0.64	0.72
		3800	1.00	1.87	2.78	3.21	3.64	4.12	4.59	5.03	5.52	5.98	6.47	7.01	7.47		0.08	0.41	0.66	0.74
		3900	0.99	1.87	2.79	3.23	3.66	4.15	4.62	5.06	5.55	6.00	6.48	7.01	7.45		0.08	0.42	0.67	0.76
		4000	0.98	1.87	2.80	3.24	3.67	4.17	4.64	5.08	5.57	6.01	6.48	6.99	7.42		0.09	0.43	0.69	0.78
	⑮	4100	0.96	1.86	2.81	3.25	3.69	4.18	4.65	5.09	5.58	6.02	6.47	6.97	7.37		0.09	0.44	0.71	0.80
		4200	0.94	1.86	2.81	3.26	3.70	4.19	4.66	5.10	5.58	6.01	6.46	6.93			0.09	0.45	0.73	0.82
		4300	0.92	1.85	2.81	3.26	3.70	4.20	4.66	5.10	5.57	6.00	6.43	6.88			0.09	0.46	0.74	0.84
		4400	0.90	1.84	2.81	3.26	3.70	4.20	4.66	5.10	5.56	5.98	6.39	6.82			0.10	0.48	0.76	0.86
		4500	0.88	1.82	2.80	3.26	3.70	4.19	4.66	5.08	5.54	5.94	6.34	6.74			0.10	0.49	0.78	0.88
		4600	0.85	1.81	2.79	3.25	3.69	4.18	4.64	5.07	5.51	5.90					0.10	0.50	0.80	0.89
		4700	0.83	1.79	2.78	3.24	3.68	4.17	4.62	5.04	5.47	5.85					0.10	0.51	0.81	0.91
		4800	0.80	1.77	2.76	3.22	3.66	4.15	4.60	5.01	5.43	5.79					0.10	0.52	0.83	0.93
		4900	0.77	1.75	2.74	3.20	3.64	4.12	4.57	4.97	5.38	5.72					0.11	0.53	0.85	0.95
		5000	0.73	1.72	2.72	3.18	3.61	4.09	4.53	4.92	5.31	5.64					0.11	0.54	0.87	0.97
		5100	0.70	1.69	2.69	3.15	3.58	4.06	4.48	4.86							0.11	0.55	0.88	0.99
		5200	0.66	1.66	2.66	3.12	3.55	4.01	4.43	4.80							0.11	0.56	0.90	1.01
		5300	0.62	1.63	2.63	3.08	3.51	3.97	4.38	4.73							0.11	0.57	0.92	1.03
	⑳	5400	0.58	1.59	2.59	3.04	3.46	3.91	4.31	4.66							0.12	0.58	0.93	1.05
		5500	0.54	1.55	2.55	3.00	3.41	3.86	4.24	4.57							0.12	0.59	0.95	1.07
		5600	0.50	1.51	2.51	2.95	3.36	3.79									0.12	0.61	0.97	1.09
		5700	0.45	1.47	2.46	2.90	3.30	3.72									0.12	0.62	0.99	1.11
		5800	0.40	1.42	2.41	2.84	3.23	3.64									0.13	0.63	1.00	1.13
		5900	0.35	1.37	2.35	2.78	3.16	3.56									0.13	0.64	1.02	1.15
		6000	0.30	1.32	2.29	2.71	3.09	3.47									0.13	0.65	1.04	1.17
													v > 30 m/s. Please consult our Application Engineering Department.							
			㉕			㉚														v [m/s]
							Dynamically balanced (for details see DIN 2211)													Pulleys

optibelt VB

POWER RATINGS

optibelt VB PROFILE B/17

NOMINAL POWER RATING P_N [kW]

FOR β = 180° AND L_d = 2280 mm

Table 51

Pulleys	v [m/s]	n_k [min⁻¹]	Datum diameter of small pulley d_{dk} [mm] 112	125	132	140	150	160	170	180	190	200	212	224	236	250	280	Additional power [kW] per belt for speed ratio i 1.01 to 1.05	1.06 to 1.26	1.27 to 1.57	> 1.57
Statically balanced		**700**	1.49	1.96	2.21	2.50	2.85	3.20	3.55	3.89	4.24	4.58	4.98	5.38	5.78	6.23	7.19	0.03	0.17	0.27	0.30
		950	1.83	2.45	2.77	3.15	3.61	4.06	4.51	4.96	5.40	5.83	6.35	6.86	7.36	7.94	9.14	0.05	0.23	0.37	0.41
		1450	2.37	3.25	3.72	4.24	4.89	5.52	6.14	6.75	7.35	7.94	8.63	9.31	9.96	10.70	12.20	0.07	0.35	0.56	0.63
		2850	2.99	4.37	5.08	5.87	6.80	7.67	8.49	9.24	9.93	10.56	11.22	11.78	12.24	12.62	12.90	0.14	0.69	1.10	1.24
		100	0.33	0.41	0.46	0.51	0.57	0.63	0.69	0.75	0.81	0.87	0.94	1.01	1.08	1.17	1.34	0.00	0.02	0.04	0.04
		200	0.58	0.73	0.81	0.91	1.02	1.14	1.25	1.37	1.48	1.59	1.73	1.86	1.99	2.15	2.47	0.01	0.05	0.08	0.09
		300	0.79	1.01	1.13	1.27	1.43	1.60	1.77	1.93	2.09	2.25	2.45	2.64	2.83	3.05	3.52	0.01	0.07	0.12	0.13
		400	0.99	1.27	1.43	1.60	1.82	2.03	2.25	2.46	2.67	2.88	3.13	3.37	3.62	3.91	4.51	0.02	0.10	0.15	0.17
		500	1.17	1.52	1.70	1.92	2.18	2.44	2.70	2.96	3.22	3.47	3.77	4.07	4.37	4.72	5.45	0.02	0.12	0.19	0.22
		600	1.33	1.74	1.96	2.21	2.52	2.83	3.13	3.44	3.74	4.03	4.39	4.74	5.09	5.49	6.34	0.03	0.14	0.23	0.26
		700	1.49	1.96	2.21	2.50	2.85	3.20	3.55	3.89	4.24	4.58	4.98	5.38	5.78	6.23	7.19	0.03	0.17	0.27	0.30
		800	1.63	2.16	2.44	2.77	3.16	3.56	3.95	4.33	4.72	5.09	5.55	5.99	6.43	6.94	8.00	0.04	0.19	0.31	0.35
	5	900	1.77	2.35	2.67	3.02	3.46	3.90	4.33	4.75	5.17	5.59	6.09	6.57	7.06	7.61	8.77	0.04	0.22	0.35	0.39
		1000	1.89	2.54	2.88	3.27	3.75	4.22	4.69	5.16	5.61	6.07	6.60	7.13	7.65	8.25	9.50	0.05	0.24	0.39	0.43
		1100	2.01	2.71	3.08	3.50	4.02	4.53	5.04	5.54	6.03	6.52	7.10	7.66	8.22	8.86	10.18	0.05	0.27	0.42	0.48
		1200	2.12	2.88	3.28	3.73	4.28	4.83	5.37	5.91	6.44	6.95	7.57	8.17	8.76	9.43	10.82	0.06	0.29	0.46	0.52
		1300	2.23	3.03	3.46	3.94	4.53	5.12	5.69	6.26	6.82	7.37	8.01	8.64	9.26	9.97	11.41	0.06	0.31	0.50	0.56
		1400	2.33	3.18	3.63	4.14	4.77	5.39	6.00	6.59	7.18	7.76	8.43	9.09	9.74	10.47	11.95	0.07	0.34	0.54	0.61
		1500	2.42	3.32	3.80	4.33	5.00	5.65	6.28	6.91	7.52	8.12	8.83	9.51	10.18	10.93	12.44	0.07	0.36	0.58	0.65
		1600	2.50	3.45	3.95	4.52	5.21	5.89	6.56	7.21	7.85	8.47	9.20	9.90	10.58	11.35	12.88	0.08	0.39	0.62	0.69
		1700	2.58	3.57	4.10	4.69	5.41	6.12	6.81	7.49	8.15	8.79	9.54	10.26	10.95	11.73	13.26	0.08	0.41	0.66	0.74
	10	1800	2.65	3.69	4.24	4.85	5.60	6.34	7.05	7.75	8.43	9.09	9.85	10.58	11.29	12.07	13.59	0.09	0.43	0.70	0.78
		1900	2.72	3.79	4.36	5.00	5.78	6.54	7.27	7.99	8.69	9.36	10.14	10.88	11.58	12.36	13.85	0.09	0.46	0.73	0.82
		2000	2.77	3.89	4.48	5.14	5.94	6.72	7.48	8.21	8.92	9.61	10.39	11.14	11.84	12.61	14.06	0.10	0.48	0.77	0.87
		2100	2.82	3.98	4.59	5.27	6.09	6.90	7.67	8.42	9.14	9.83	10.62	11.36	12.06	12.81	14.19	0.10	0.51	0.81	0.91
		2200	2.87	4.06	4.69	5.39	6.23	7.05	7.84	8.60	9.33	10.02	10.81	11.55	12.23	12.96	14.26	0.11	0.53	0.85	0.96
		2300	2.91	4.14	4.78	5.49	6.36	7.19	7.99	8.76	9.49	10.19	10.97	11.70	12.36	13.06	14.26	0.11	0.56	0.89	1.00
		2400	2.94	4.20	4.86	5.59	6.47	7.32	8.13	8.90	9.63	10.32	11.10	11.81	12.45	13.11	14.19	0.12	0.58	0.93	1.04
	15	2500	2.96	4.25	4.93	5.67	6.57	7.43	8.24	9.02	9.75	10.43	11.19	11.88	12.49	13.10	14.04	0.12	0.60	0.97	1.09
		2600	2.98	4.30	4.98	5.74	6.65	7.52	8.34	9.11	9.83	10.51	11.25	11.90	12.48			0.13	0.63	1.00	1.13
		2700	2.99	4.34	5.03	5.80	6.72	7.59	8.41	9.18	9.90	10.55	11.27	11.89	12.42			0.13	0.65	1.04	1.17
		2800	2.99	4.36	5.07	5.85	6.77	7.65	8.47	9.23	9.93	10.57	11.25	11.83	12.31			0.14	0.68	1.08	1.22
		2900	2.98	4.38	5.10	5.88	6.81	7.69	8.50	9.25	9.93	10.55	11.19	11.73	12.15			0.14	0.70	1.12	1.26
		3000	2.97	4.39	5.11	5.90	6.84	7.71	8.51	9.25	9.91	10.49	11.09	11.58	11.93			0.14	0.72	1.16	1.30
		3100	2.95	4.39	5.12	5.91	6.84	7.71	8.50	9.22	9.85	10.41						0.15	0.75	1.20	1.35
		3200	2.92	4.37	5.11	5.90	6.83	7.69	8.47	9.16	9.77	10.28						0.15	0.77	1.24	1.39
		3300	2.89	4.35	5.09	5.88	6.81	7.65	8.41	9.08	9.65	10.12						0.16	0.80	1.27	1.43
		3400	2.85	4.32	5.06	5.85	6.77	7.59	8.33	8.96	9.50	9.92						0.16	0.82	1.31	1.48
	20	3500	2.80	4.27	5.01	5.80	6.71	7.52	8.22	8.82	9.31	9.68						0.17	0.84	1.35	1.52
		3600	2.74	4.22	4.96	5.74	6.63	7.41	8.09									0.17	0.87	1.39	1.56
		3700	2.67	4.15	4.89	5.66	6.53	7.29	7.93									0.18	0.89	1.43	1.61
		3800	2.59	4.08	4.80	5.57	6.42	7.15	7.75									0.18	0.92	1.47	1.65
		3900	2.51	3.99	4.71	5.46	6.29	6.98	7.54									0.19	0.94	1.51	1.69
		4000	2.42	3.89	4.60	5.34	6.13	6.79	7.31									0.19	0.97	1.55	1.74
		4100	2.31	3.78	4.48	5.19	5.96											0.20	0.99	1.58	1.78
		4200	2.20	3.65	4.34	5.04	5.77											0.20	1.01	1.62	1.82
	25	4300	2.08	3.52	4.19	4.86	5.56											0.21	1.04	1.66	1.87
		4400	1.95	3.37	4.02	4.67	5.32											0.21	1.06	1.70	1.91
		4500	1.82	3.21	3.84	4.46	5.07											0.22	1.09	1.74	1.95
		4600	1.67	3.03	3.65													0.22	1.11	1.78	2.00
		4700	1.51	2.85	3.44													0.23	1.13	1.82	2.04
		4800	1.34	2.65	3.21													0.23	1.16	1.85	2.08
		4900	1.16	2.43	2.97													0.24	1.18	1.89	2.13
		5000	0.97	2.20	2.71													0.24	1.21	1.93	2.17
															v > 30 m/s. Please consult our Application Engineering Department.						
			30															v [m/s]			
			Dynamically balanced (for details see DIN 2211)															Pulleys			

optibelt

POWER RATINGS

optibelt VB PROFILE C/22

NOMINAL POWER RATING P_N [kW]

FOR β = 180° AND L_d = 3808 mm

Table 52

Pulleys	v [m/s]	n_k [min⁻¹]	Datum diameter of small pulley d_{dk} [mm] 180	200	212	224	236	250	265	280	300	315	335	355	375	400	450	Additional power [kW] per belt for speed ratio i 1.01 to 1.05	1.06 to 1.26	1.27 to 1.57	> 1.57
Statically balanced		**700**	4.51	5.66	6.35	7.02	7.69	8.47	9.28	10.09	11.16	11.94	12.98	14.00	15.00	16.22	18.58	0.08	0.40	0.63	0.71
		950	5.60	7.08	7.95	8.81	9.67	10.64	11.67	12.69	14.01	14.98	16.24	17.47	18.66	20.10	22.79	0.11	0.54	0.86	0.97
		1450	7.23	9.24	10.42	11.56	12.67	13.93	15.24	16.49	18.08	19.20	20.62	21.93	23.13	24.46	26.56	0.16	0.82	1.31	1.48
		2850	7.54	9.81	10.94	11.91	12.69	13.37	13.79	13.88	13.47	12.74						0.32	1.61	2.58	2.90
		50	0.53	0.64	0.70	0.76	0.83	0.90	0.98	1.06	1.16	1.24	1.34	1.44	1.54	1.67	1.92	0.01	0.03	0.05	0.05
		100	0.95	1.16	1.28	1.39	1.51	1.65	1.80	1.95	2.14	2.28	2.48	2.67	2.86	3.09	3.56	0.01	0.06	0.09	0.10
		150	1.34	1.63	1.80	1.97	2.15	2.35	2.56	2.77	3.05	3.26	3.54	3.81	4.09	4.43	5.10	0.02	0.08	0.14	0.15
		200	1.69	2.07	2.30	2.52	2.75	3.00	3.28	3.55	3.92	4.19	4.55	4.91	5.26	5.70	6.57	0.02	0.11	0.18	0.20
		250	2.03	2.49	2.77	3.04	3.32	3.63	3.97	4.31	4.75	5.08	5.52	5.95	6.39	6.92	7.98	0.03	0.14	0.23	0.25
		300	2.35	2.90	3.22	3.54	3.87	4.24	4.64	5.03	5.55	5.94	6.45	6.97	7.47	8.10	9.34	0.03	0.17	0.27	0.31
		350	2.66	3.28	3.66	4.03	4.40	4.82	5.28	5.73	6.33	6.77	7.36	7.94	8.52	9.24	10.66	0.04	0.20	0.32	0.36
		400	2.95	3.66	4.08	4.49	4.91	5.39	5.90	6.41	7.08	7.58	8.24	8.89	9.54	10.34	11.92	0.05	0.23	0.36	0.41
		450	3.23	4.02	4.48	4.95	5.41	5.94	6.51	7.07	7.81	8.36	9.09	9.81	10.53	11.41	13.14	0.05	0.25	0.41	0.46
		500	3.51	4.37	4.88	5.39	5.89	6.47	7.09	7.71	8.52	9.12	9.92	10.70	11.48	12.44	14.32	0.06	0.28	0.45	0.51
	5	550	3.77	4.71	5.26	5.81	6.36	6.99	7.67	8.33	9.21	9.86	10.72	11.57	12.41	13.44	15.46	0.06	0.31	0.50	0.56
		600	4.03	5.04	5.63	6.23	6.82	7.50	8.22	8.94	9.88	10.58	11.50	12.41	13.30	14.40	16.55	0.07	0.34	0.54	0.61
		650	4.27	5.36	6.00	6.63	7.26	7.99	8.76	9.52	10.53	11.27	12.25	13.21	14.16	15.33	17.59	0.07	0.37	0.59	0.66
		700	4.51	5.66	6.35	7.02	7.69	8.47	9.28	10.09	11.16	11.94	12.98	14.00	15.00	16.22	18.58	0.08	0.40	0.63	0.71
		750	4.74	5.97	6.69	7.40	8.11	8.93	9.79	10.65	11.77	12.60	13.68	14.75	15.80	17.07	19.53	0.08	0.42	0.68	0.76
		800	4.97	6.26	7.02	7.77	8.52	9.38	10.29	11.18	12.36	13.23	14.36	15.47	16.56	17.89	20.42	0.09	0.45	0.72	0.81
		850	5.18	6.54	7.34	8.13	8.91	9.81	10.76	11.70	12.93	13.83	15.01	16.17	17.30	18.67	21.27	0.10	0.48	0.77	0.87
		900	5.39	6.81	7.65	8.48	9.29	10.24	11.23	12.20	13.48	14.42	15.64	16.83	18.00	19.40	22.05	0.10	0.51	0.81	0.92
		950	5.60	7.08	7.95	8.81	9.67	10.64	11.67	12.69	14.01	14.98	16.24	17.47	18.66	20.10	22.79	0.11	0.54	0.86	0.97
		1000	5.79	7.33	8.24	9.14	10.02	11.04	12.11	13.15	14.52	15.52	16.81	18.07	19.29	20.75	23.46	0.11	0.57	0.91	1.02
		1050	5.98	7.58	8.52	9.45	10.37	11.42	12.52	13.60	15.01	16.03	17.36	18.64	19.88	21.36	24.07	0.12	0.59	0.95	1.07
		1100	6.16	7.82	8.80	9.76	10.70	11.79	12.92	14.03	15.47	16.52	17.87	19.18	20.43	21.92	24.62	0.12	0.62	1.00	1.12
		1150	6.33	8.05	9.06	10.05	11.02	12.14	13.30	14.44	15.91	16.98	18.36	19.68	20.94	22.43	25.11	0.13	0.65	1.04	1.17
		1200	6.50	8.27	9.31	10.33	11.33	12.47	13.67	14.83	16.34	17.42	18.82	20.15	21.42	22.90	25.53	0.14	0.68	1.09	1.22
	10	1250	6.66	8.48	9.55	10.60	11.63	12.80	14.02	15.21	16.73	17.83	19.24	20.58	21.85	23.32	25.88	0.14	0.71	1.13	1.27
		1300	6.81	8.69	9.78	10.86	11.91	13.10	14.35	15.56	17.11	18.22	19.64	20.98	22.23	23.69	26.17	0.15	0.74	1.18	1.32
		1350	6.96	8.88	10.00	11.10	12.18	13.40	14.66	15.89	17.46	18.58	20.00	21.33	22.58	24.00	26.37	0.15	0.76	1.22	1.37
		1400	7.09	9.07	10.22	11.34	12.43	13.67	14.96	16.20	17.78	18.91	20.33	21.65	22.87	24.26	26.51	0.16	0.79	1.27	1.42
		1450	7.23	9.24	10.42	11.56	12.67	13.93	15.24	16.49	18.08	19.20	20.62	21.93	23.13	24.46	26.56	0.16	0.82	1.31	1.48
		1500	7.35	9.41	10.60	11.77	12.90	14.18	15.50	16.76	18.35	19.47	20.88	22.16	23.33	24.61	26.54	0.17	0.85	1.36	1.53
		1550	7.46	9.57	10.78	11.97	13.11	14.41	15.73	17.00	18.60	19.71	21.10	22.36	23.48	24.70	26.43	0.18	0.88	1.40	1.58
		1600	7.57	9.71	10.95	12.15	13.31	14.62	15.95	17.23	18.81	19.92	21.28	22.51	23.59	24.72	26.24	0.18	0.91	1.45	1.63
		1650	7.67	9.85	11.11	12.32	13.49	14.81	16.15	17.42	19.00	20.10	21.43	22.61	23.64	24.69	25.96	0.19	0.93	1.49	1.68
		1700	7.77	9.98	11.25	12.48	13.66	14.99	16.33	17.60	19.17	20.24	21.54	22.67	23.64	24.59	25.59	0.19	0.96	1.54	1.73
	15	1750	7.85	10.10	11.38	12.62	13.82	15.14	16.49	17.75	19.30	20.35	21.61	22.69	23.58	24.42	25.13	0.20	0.99	1.58	1.78
		1800	7.93	10.20	11.50	12.75	13.95	15.28	16.63	17.88	19.40	20.43	21.64	22.65				0.20	1.02	1.63	1.83
		1850	8.00	10.30	11.61	12.87	14.07	15.41	16.74	17.98	19.47	20.47	21.62	22.57				0.21	1.05	1.67	1.88
		1900	8.06	10.39	11.71	12.97	14.18	15.51	16.83	18.06	19.51	20.47	21.57	22.44				0.22	1.07	1.72	1.93
		1950	8.12	10.46	11.79	13.06	14.27	15.59	16.90	18.10	19.52	20.44	21.47	22.25				0.22	1.10	1.77	1.98
		2000	8.16	10.53	11.87	13.14	14.34	15.65	16.95	18.13	19.50	20.37	21.32	22.02				0.23	1.13	1.81	2.04
		2050	8.20	10.58	11.92	13.20	14.40	15.70	16.97	18.12	19.44							0.23	1.16	1.86	2.09
		2100	8.23	10.63	11.97	13.24	14.43	15.72	16.97	18.09	19.35							0.24	1.19	1.90	2.14
	20	2150	8.25	10.66	12.00	13.27	14.45	15.72	16.95	18.03	19.23							0.24	1.22	1.95	2.19
		2200	8.26	10.68	12.02	13.28	14.45	15.71	16.90	17.94	19.07							0.25	1.24	1.99	2.24
		2250	8.26	10.69	12.03	13.28	14.44	15.67	16.83	17.82	18.87							0.25	1.27	2.04	2.29
		2300	8.25	10.68	12.02	13.26	14.40	15.60	16.73									0.26	1.30	2.08	2.34
		2350	8.24	10.67	12.00	13.23	14.35	15.52	16.60									0.27	1.33	2.13	2.39
		2400	8.21	10.64	11.96	13.17	14.27	15.41	16.45									0.27	1.36	2.17	2.44
		2450	8.18	10.60	11.91	13.10	14.18	15.28	16.26									0.28	1.39	2.22	2.49
		2500	8.13	10.55	11.84	13.02	14.07	15.13	16.06									0.28	1.41	2.26	2.54
		2550	8.08	10.48	11.76	12.91	13.94											0.29	1.44	2.31	2.60
		2600	8.01	10.40	11.66	12.79	13.78											0.29	1.47	2.35	2.65
	25	2650	7.94	10.31	11.55	12.65	13.61											0.30	1.50	2.40	2.70
		2700	7.86	10.20	11.42	12.49	13.41											0.31	1.53	2.44	2.75
		2750	7.76	10.08	11.28	12.32	13.19											0.31	1.56	2.49	2.80
		2800	7.66	9.95	11.12	12.12												0.32	1.58	2.53	2.85
		2850	7.54	9.81	10.94	11.91												0.32	1.61	2.58	2.90
		2900	7.42	9.64	10.75	11.67												0.33	1.64	2.63	2.95
		2950	7.28	9.47	10.54	11.42												0.33	1.67	2.67	3.00
		3000	7.14	9.28	10.31	11.15												0.34	1.70	2.72	3.05
		3050	6.98	9.08														0.35	1.73	2.76	3.10
		3100	6.81	8.86														0.35	1.75	2.81	3.15
	30	3150	6.63	8.62														0.36	1.78	2.85	3.21
		3200	6.44	8.37														0.36	1.81	2.90	3.26
		3250	6.24	8.11														0.37	1.84	2.94	3.31

v > 55 m/s.
Please consult our Application Engineering Department.

v > 30 m/s.
Please consult our Application Engineering Department.

v [m/s]

Dynamically balanced (for details see DIN 2211)

Pulleys

© ARNTZ OPTIBELT GROUP, GERMANY

POWER RATINGS

optibelt VB PROFILE 20

NOMINAL POWER RATING P_N [kW]

FOR β = 180° AND L_d = 3198 mm

Table 53

Pulleys	v [m/s]	n_k [min⁻¹]	Datum diameter of small pulley d_{dk} [mm] 140	160	180	200	224	236	250	280	315	355	Additional power [kW] per belt for speed ratio i 1.01 to 1.05	1.06 to 1.26	1.27 to 1.57	> 1.57
Statically balanced		**700**	2.62	3.33	4.02	4.70	5.49	5.88	6.32	7.25	8.30	9.44	0.04	0.18	0.29	0.32
		950	3.21	4.11	4.99	5.83	6.82	7.30	7.84	8.97	10.21	11.53	0.05	0.24	0.39	0.44
		1450	4.08	5.30	6.46	7.56	8.80	9.38	10.03	11.32	12.61	13.81	0.07	0.37	0.59	0.67
		2850	4.64	6.11	7.29	8.16	8.75	8.85	8.79	7.99	5.78		0.15	0.73	1.17	1.31
		50	0.34	0.41	0.48	0.55	0.63	0.68	0.72	0.83	0.94	1.08	0.00	0.01	0.02	0.02
		100	0.60	0.73	0.86	0.99	1.15	1.22	1.31	1.50	1.71	1.96	0.01	0.03	0.04	0.05
		150	0.82	1.02	1.20	1.39	1.61	1.72	1.84	2.11	2.42	2.76	0.01	0.04	0.06	0.07
		200	1.04	1.28	1.52	1.76	2.04	2.18	2.34	2.68	3.07	3.51	0.01	0.05	0.08	0.09
		250	1.23	1.53	1.82	2.11	2.45	2.62	2.82	3.23	3.70	4.23	0.01	0.06	0.10	0.12
		300	1.42	1.76	2.11	2.44	2.84	3.04	3.27	3.75	4.29	4.91	0.02	0.08	0.12	0.14
		350	1.59	1.99	2.38	2.76	3.22	3.44	3.70	4.24	4.87	5.56	0.02	0.09	0.14	0.16
		400	1.76	2.20	2.64	3.07	3.58	3.83	4.11	4.72	5.41	6.19	0.02	0.10	0.16	0.18
		450	1.92	2.41	2.89	3.37	3.92	4.20	4.51	5.18	5.94	6.79	0.02	0.12	0.18	0.21
		500	2.07	2.61	3.13	3.65	4.26	4.56	4.90	5.63	6.45	7.36	0.03	0.13	0.21	0.23
		550	2.22	2.80	3.37	3.93	4.58	4.90	5.28	6.06	6.94	7.92	0.03	0.14	0.23	0.25
		600	2.36	2.98	3.59	4.19	4.90	5.24	5.64	6.47	7.41	8.45	0.03	0.15	0.25	0.28
		650	2.49	3.16	3.81	4.45	5.20	5.56	5.99	6.87	7.86	8.96	0.03	0.17	0.27	0.30
	5	700	2.62	3.33	4.02	4.70	5.49	5.88	6.32	7.25	8.30	9.44	0.04	0.18	0.29	0.32
		750	2.75	3.50	4.23	4.94	5.78	6.18	6.65	7.63	8.72	9.91	0.04	0.19	0.31	0.35
		800	2.87	3.66	4.43	5.18	6.05	6.48	6.97	7.98	9.12	10.35	0.04	0.21	0.33	0.37
		850	2.99	3.81	4.62	5.40	6.32	6.76	7.27	8.33	9.50	10.77	0.04	0.22	0.35	0.39
		900	3.10	3.96	4.81	5.62	6.57	7.03	7.56	8.66	9.87	11.16	0.05	0.23	0.37	0.42
		950	3.21	4.11	4.99	5.83	6.82	7.30	7.84	8.97	10.21	11.53	0.05	0.24	0.39	0.44
		1000	3.31	4.25	5.16	6.04	7.06	7.55	8.11	9.27	10.54	11.88	0.05	0.26	0.41	0.46
		1050	3.41	4.39	5.33	6.24	7.29	7.79	8.37	9.56	10.85	12.20	0.05	0.27	0.43	0.48
		1100	3.51	4.52	5.49	6.43	7.51	8.03	8.62	9.83	11.14	12.50	0.06	0.28	0.45	0.51
		1150	3.60	4.64	5.65	6.61	7.72	8.25	8.86	10.09	11.41	12.77	0.06	0.29	0.47	0.53
		1200	3.69	4.76	5.80	6.79	7.92	8.47	9.08	10.33	11.66	13.01	0.06	0.31	0.49	0.55
		1250	3.78	4.88	5.94	6.96	8.11	8.67	9.30	10.56	11.90	13.23	0.06	0.32	0.51	0.58
		1300	3.86	4.99	6.08	7.12	8.30	8.86	9.50	10.77	12.11	13.42	0.07	0.33	0.53	0.60
		1350	3.94	5.10	6.21	7.27	8.47	9.05	9.69	10.97	12.30	13.58	0.07	0.35	0.55	0.62
	10	1400	4.01	5.20	6.34	7.42	8.64	9.22	9.87	11.15	12.47	13.71	0.07	0.36	0.57	0.65
		1450	4.08	5.30	6.46	7.56	8.80	9.38	10.03	11.32	12.61	13.81	0.07	0.37	0.59	0.67
		1500	4.15	5.40	6.58	7.69	8.94	9.53	10.18	11.46	12.74	13.88	0.08	0.38	0.62	0.69
		1550	4.22	5.49	6.69	7.82	9.08	9.67	10.33	11.60	12.84	13.92	0.08	0.40	0.64	0.71
		1600	4.28	5.57	6.79	7.94	9.21	9.80	10.45	11.71	12.92	13.93	0.08	0.41	0.66	0.74
		1650	4.34	5.65	6.89	8.05	9.33	9.92	10.57	11.81	12.97	13.90	0.08	0.42	0.68	0.76
		1700	4.39	5.73	6.98	8.15	9.43	10.02	10.67	11.89	13.00	13.84	0.09	0.44	0.70	0.78
		1750	4.44	5.80	7.07	8.24	9.53	10.12	10.76	11.95	13.01	13.75	0.09	0.45	0.72	0.81
		1800	4.49	5.87	7.15	8.33	9.62	10.20	10.83	11.99	12.99	13.62	0.09	0.46	0.74	0.83
		1850	4.53	5.93	7.22	8.41	9.69	10.27	10.89	12.02	12.94	13.46	0.09	0.47	0.76	0.85
		1900	4.57	5.98	7.29	8.48	9.76	10.33	10.94	12.02	12.87	13.26	0.10	0.49	0.78	0.88
		1950	4.61	6.04	7.35	8.55	9.81	10.38	10.97	12.01	12.77	13.02	0.10	0.50	0.80	0.90
		2000	4.64	6.08	7.41	8.60	9.86	10.41	10.99	11.97	12.65	12.74	0.10	0.51	0.82	0.92
		2050	4.67	6.13	7.45	8.65	9.89	10.43	10.99	11.92	12.49		0.11	0.53	0.84	0.95
	15	2100	4.70	6.16	7.50	8.69	9.91	10.44	10.98	11.84	12.31		0.11	0.54	0.86	0.97
		2150	4.72	6.20	7.53	8.71	9.92	10.43	10.95	11.75	12.10		0.11	0.55	0.88	0.99
		2200	4.74	6.22	7.56	8.74	9.92	10.41	10.91	11.63	11.86		0.11	0.56	0.90	1.01
		2250	4.75	6.25	7.58	8.75	9.91	10.38	10.85	11.49	11.59		0.12	0.58	0.92	1.04
		2300	4.76	6.27	7.60	8.75	9.88	10.34	10.77	11.33			0.12	0.59	0.94	1.06
		2350	4.77	6.28	7.61	8.75	9.84	10.28	10.68	11.14			0.12	0.60	0.96	1.08
		2400	4.77	6.29	7.61	8.73	9.79	10.20	10.57	10.94			0.12	0.62	0.98	1.11
		2450	4.77	6.29	7.60	8.71	9.73	10.11	10.44	10.71			0.13	0.63	1.01	1.13
		2500	4.77	6.28	7.59	8.67	9.66	10.01	10.30	10.45			0.13	0.64	1.03	1.15
		2550	4.76	6.28	7.57	8.63	9.57	9.89					0.13	0.65	1.05	1.18
		2600	4.75	6.26	7.54	8.58	9.47	9.76					0.13	0.67	1.07	1.20
		2650	4.74	6.24	7.51	8.51	9.35	9.61					0.14	0.68	1.09	1.22
		2700	4.72	6.22	7.47	8.44	9.22	9.44					0.14	0.69	1.11	1.25
	20	2750	4.69	6.19	7.42	8.36	9.08	9.26					0.14	0.71	1.13	1.27
		2800	4.67	6.15	7.36	8.27	8.92						0.14	0.72	1.15	1.29
		2850	4.64	6.11	7.29	8.16	8.75						0.15	0.73	1.17	1.31
		2900	4.60	6.06	7.22	8.05	8.57						0.15	0.74	1.19	1.34
		2950	4.56	6.01	7.14	7.93	8.37						0.15	0.76	1.21	1.36
		3000	4.52	5.95	7.05	7.79	8.16						0.15	0.77	1.23	1.38
					25	30										v [m/s]
						Dynamically balanced										Pulleys

v > 30 m/s.
Please consult our Application Engineering Department.

optibelt VB

POWER RATINGS

optibelt VB PROFILE 25

NOMINAL POWER RATING P_N [kW]

FOR β = 180° AND L_d = 4561 mm

Table 54

Pulleys	v [m/s]	n_k [min⁻¹]	Datum diameter of small pulley d_{dk} [mm] 224	236	250	280	315	355	400	450	500	560	Additional power [kW] per belt for speed ratio i 1.01 to 1.05	1.06 to 1.26	1.27 to 1.57	> 1.57
Statically balanced		**700**	5.68	6.47	7.38	9.28	11.45	13.84	16.43	19.16	21.74	24.62	0.12	0.61	0.97	1.09
		950	6.86	7.86	9.00	11.38	14.03	16.90	19.91	22.94	25.63	28.37	0.16	0.82	1.32	1.48
		1450	8.15	9.43	10.88	13.78	16.81	19.77	22.40				0.25	1.26	2.01	2.26
		2850											0.49	2.47	3.95	4.44
		50	0.71	0.78	0.87	1.05	1.26	1.50	1.76	2.06	2.35	2.69	0.01	0.04	0.07	0.08
		100	1.26	1.40	1.56	1.91	2.31	2.76	3.26	3.81	4.35	5.00	0.02	0.09	0.14	0.16
		150	1.76	1.96	2.20	2.69	3.27	3.92	4.64	5.44	6.22	7.15	0.03	0.13	0.21	0.23
		200	2.22	2.48	2.79	3.43	4.18	5.02	5.96	6.98	7.99	9.19	0.03	0.17	0.28	0.31
		250	2.65	2.97	3.34	4.13	5.04	6.07	7.21	8.46	9.69	11.14	0.04	0.22	0.35	0.39
		300	3.06	3.43	3.87	4.80	5.87	7.08	8.41	9.87	11.30	12.99	0.05	0.26	0.42	0.47
		350	3.44	3.88	4.38	5.44	6.67	8.05	9.57	11.23	12.86	14.76	0.06	0.30	0.49	0.55
	5	400	3.81	4.30	4.86	6.06	7.43	8.98	10.68	12.53	14.34	16.45	0.07	0.35	0.55	0.62
		450	4.16	4.70	5.33	6.65	8.17	9.87	11.75	13.78	15.75	18.05	0.08	0.39	0.62	0.70
		500	4.49	5.09	5.77	7.22	8.88	10.74	12.77	14.97	17.10	19.56	0.09	0.43	0.69	0.78
		550	4.81	5.45	6.20	7.77	9.56	11.56	13.75	16.11	18.37	20.97	0.10	0.48	0.76	0.86
		600	5.12	5.81	6.61	8.29	10.22	12.36	14.69	17.18	19.57	22.29	0.10	0.52	0.83	0.94
		650	5.41	6.15	7.00	8.80	10.85	13.12	15.58	18.20	20.70	23.51	0.11	0.56	0.90	1.01
		700	5.68	6.47	7.38	9.28	11.45	13.84	16.43	19.16	21.74	24.62	0.12	0.61	0.97	1.09
		750	5.95	6.78	7.73	9.75	12.02	14.53	17.22	20.05	22.70	25.61	0.13	0.65	1.04	1.17
		800	6.20	7.07	8.08	10.19	12.57	15.18	17.97	20.88	23.57	26.49	0.14	0.69	1.11	1.25
		850	6.43	7.35	8.40	10.61	13.09	15.79	18.67	21.64	24.35	27.25	0.15	0.74	1.18	1.33
	10	900	6.65	7.61	8.71	11.00	13.57	16.37	19.31	22.33	25.04	27.88	0.16	0.78	1.25	1.40
		950	6.86	7.86	9.00	11.38	14.03	16.90	19.91	22.94	25.63	28.37	0.16	0.82	1.32	1.48
		1000	7.06	8.09	9.27	11.73	14.46	17.40	20.44	23.48	26.12	28.72	0.17	0.87	1.39	1.56
		1050	7.24	8.30	9.52	12.06	14.86	17.85	20.92	23.93	26.50	28.93	0.18	0.91	1.46	1.64
		1100	7.40	8.50	9.76	12.36	15.22	18.26	21.33	24.31	26.77	28.99	0.19	0.95	1.53	1.72
		1150	7.55	8.69	9.98	12.64	15.56	18.62	21.69	24.60	26.92	28.88	0.20	1.00	1.60	1.79
		1200	7.69	8.85	10.18	12.90	15.86	18.93	21.98	24.80	26.96	28.62	0.21	1.04	1.66	1.87
		1250	7.81	9.00	10.36	13.13	16.12	19.20	22.20	24.90	26.87	28.18	0.22	1.08	1.73	1.95
	15	1300	7.92	9.14	10.52	13.33	16.35	19.42	22.36	24.92			0.23	1.13	1.80	2.03
		1350	8.02	9.25	10.66	13.51	16.54	19.59	22.45	24.83			0.23	1.17	1.87	2.10
		1400	8.09	9.35	10.78	13.66	16.69	19.71	22.46	24.65			0.24	1.21	1.94	2.18
		1450	8.15	9.43	10.88	13.78	16.81	19.77	22.40	24.36			0.25	1.26	2.01	2.26
		1500	8.20	9.50	10.96	13.87	16.89	19.78	22.26	23.96			0.26	1.30	2.08	2.34
		1550	8.23	9.54	11.01	13.93	16.92	19.73					0.27	1.34	2.15	2.42
		1600	8.24	9.57	11.05	13.97	16.92	19.63					0.28	1.39	2.22	2.49
		1650	8.24	9.57	11.06	13.97	16.87	19.46					0.29	1.43	2.29	2.57
	20	1700	8.22	9.56	11.04	13.94	16.78	19.24					0.29	1.47	2.36	2.65
		1750	8.18	9.52	11.01	13.88	16.64	18.95					0.30	1.52	2.43	2.73
		1800	8.12	9.47	10.95	13.79	16.46						0.31	1.56	2.50	2.81
		1850	8.04	9.39	10.87	13.66	16.23						0.32	1.60	2.57	2.88
		1900	7.95	9.29	10.76	13.50	15.95						0.33	1.65	2.64	2.96
		1950	7.84	9.17	10.62	13.30	15.63						0.34	1.69	2.70	3.04
		2000	7.70	9.03	10.46	13.07	15.25						0.35	1.73	2.77	3.12
		2050	7.55	8.87	10.27	12.80							0.36	1.78	2.84	3.20
	25	2100	7.38	8.68	10.06	12.49							0.36	1.82	2.91	3.27
		2150	7.19	8.47	9.82	12.15							0.37	1.86	2.98	3.35
		2200	6.97	8.23	9.55	11.76							0.38	1.91	3.05	3.43
		2250	6.74	7.97	9.25	11.34							0.39	1.95	3.12	3.51
		2300	6.48	7.69	8.92								0.40	1.99	3.19	3.59
		2350	6.21	7.38	8.56								0.41	2.04	3.26	3.66
		2400	5.91	7.04	8.17								0.42	2.08	3.33	3.74
		2450	5.58	6.68	7.75								0.42	2.12	3.40	3.82
		2500	5.24	6.29	7.30								0.43	2.17	3.47	3.90
												v > 30 m/s. Please consult our Application Engineering Department.				
			30										v [m/s]			
			Dynamically balanced (for details see DIN 2211)										Pulleys			

optibelt

POWER RATINGS

optibelt VB PROFILE D/32

NOMINAL POWER RATING P_N [kW]

FOR β = 180° AND L_d = 6375 mm

Table 55

Pulleys	v [m/s]	n_k [min⁻¹]	Datum diameter of small pulley d_{dk} [mm] 315	355	375	400	425	450	500	560	630	670	710	750	800	900	Additional power [kW] per belt for speed ratio i 1.01 to 1.05	1.06 to 1.26	1.27 to 1.57	> 1.57
Statically balanced		**700**	15.30	19.17	21.05	23.36	25.62	27.82	32.05	36.82	41.91	44.59	47.08	49.38	51.98	56.17	0.23	1.14	1.82	2.05
		950	18.50	23.20	25.45	28.15	30.75	33.23	37.80	42.59	47.12	49.16	50.77	51.93	52.71	51.90	0.31	1.54	2.47	2.78
		1450	21.43	26.56	28.81	31.31	33.45	35.22	37.54	38.01	35.03						0.47	2.36	3.77	4.24
		20	0.80	0.96	1.04	1.14	1.24	1.34	1.54	1.78	2.05	2.21	2.36	2.51	2.71	3.08	0.01	0.03	0.05	0.06
		40	1.46	1.77	1.93	2.12	2.31	2.50	2.87	3.32	3.84	4.13	4.42	4.71	5.07	5.79	0.01	0.06	0.10	0.12
		60	2.08	2.53	2.75	3.03	3.31	3.58	4.13	4.77	5.52	5.95	6.37	6.79	7.31	8.34	0.02	0.10	0.16	0.18
		80	2.66	3.25	3.54	3.90	4.26	4.61	5.32	6.17	7.14	7.69	8.24	8.78	9.46	10.80	0.03	0.13	0.21	0.23
		100	3.22	3.94	4.29	4.74	5.18	5.61	6.48	7.51	8.70	9.38	10.05	10.71	11.54	13.18	0.03	0.16	0.26	0.29
		120	3.76	4.61	5.03	5.55	6.07	6.58	7.61	8.82	10.23	11.02	11.81	12.59	13.56	15.49	0.04	0.19	0.31	0.35
		140	4.28	5.26	5.74	6.34	6.94	7.53	8.71	10.10	11.71	12.62	13.52	14.42	15.53	17.73	0.05	0.23	0.36	0.41
		160	4.79	5.89	6.43	7.11	7.78	8.45	9.78	11.35	13.16	14.19	15.20	16.21	17.46	19.93	0.05	0.26	0.42	0.47
		180	5.29	6.51	7.11	7.87	8.61	9.36	10.83	12.57	14.58	15.72	16.84	17.96	19.34	22.06	0.06	0.29	0.47	0.53
		200	5.77	7.11	7.78	8.61	9.43	10.24	11.86	13.77	15.97	17.22	18.45	19.67	21.18	24.15	0.06	0.32	0.52	0.58
		220	6.24	7.71	8.43	9.33	10.22	11.11	12.87	14.95	17.34	18.69	20.02	21.34	22.97	26.18	0.07	0.36	0.57	0.64
		240	6.70	8.29	9.07	10.04	11.01	11.97	13.86	16.10	18.68	20.12	21.56	22.98	24.73	28.16	0.08	0.39	0.62	0.70
		260	7.16	8.86	9.70	10.74	11.78	12.80	14.84	17.24	19.99	21.53	23.06	24.58	26.44	30.09	0.08	0.42	0.68	0.76
		280	7.60	9.42	10.31	11.43	12.53	13.63	15.79	18.35	21.27	22.91	24.54	26.14	28.11	31.96	0.09	0.45	0.73	0.82
	⑤	300	8.04	9.97	10.92	12.10	13.27	14.44	16.73	19.44	22.53	24.27	25.98	27.67	29.74	33.78	0.10	0.49	0.78	0.88
		320	8.47	10.51	11.51	12.77	14.00	15.23	17.66	20.51	23.77	25.59	27.39	29.16	31.33	35.55	0.10	0.52	0.83	0.94
		340	8.89	11.04	12.10	13.42	14.72	16.01	18.56	21.56	24.97	26.88	28.76	30.61	32.87	37.26	0.11	0.55	0.88	0.99
		360	9.30	11.56	12.68	14.06	15.43	16.78	19.46	22.59	26.16	28.15	30.10	32.02	34.37	38.90	0.12	0.58	0.94	1.05
		380	9.71	12.07	13.24	14.69	16.12	17.54	20.33	23.60	27.31	29.38	31.41	33.40	35.83	40.49	0.12	0.62	0.99	1.11
		400	10.11	12.58	13.80	15.31	16.80	18.28	21.19	24.59	28.44	30.59	32.68	34.74	37.24	42.02	0.13	0.65	1.04	1.17
		420	10.50	13.08	14.35	15.92	17.47	19.01	22.03	25.56	29.55	31.76	33.92	36.03	38.60	43.48	0.14	0.68	1.09	1.23
		440	10.88	13.56	14.89	16.52	18.13	19.73	22.86	26.51	30.62	32.90	35.12	37.29	39.91	44.88	0.14	0.71	1.14	1.29
		460	11.26	14.04	15.41	17.11	18.78	20.43	23.67	27.44	31.67	34.01	36.29	38.50	41.18	46.21	0.15	0.75	1.20	1.34
		480	11.63	14.52	15.93	17.69	19.42	21.12	24.46	28.34	32.69	35.09	37.41	39.67	42.39	47.47	0.16	0.78	1.25	1.40
		500	12.00	14.98	16.45	18.25	20.04	21.80	25.24	29.23	33.69	36.13	38.50	40.80	43.55	48.66	0.16	0.81	1.30	1.46
		520	12.36	15.44	16.95	18.81	20.65	22.46	26.00	30.09	34.65	37.14	39.55	41.88	44.66	49.78	0.17	0.84	1.35	1.52
		540	12.71	15.88	17.44	19.36	21.25	23.11	26.74	30.93	35.58	38.12	40.56	42.91	45.71	50.82	0.18	0.88	1.40	1.58
		560	13.06	16.32	17.92	19.90	21.84	23.75	27.47	31.75	36.49	39.06	41.53	43.90	46.71	51.78	0.18	0.91	1.46	1.64
		580	13.40	16.75	18.40	20.42	22.42	24.37	28.18	32.55	37.36	39.96	42.46	44.84	47.64	52.67	0.19	0.94	1.51	1.69
	⑩	600	13.73	17.18	18.86	20.94	22.98	24.98	28.87	33.32	38.20	40.83	43.34	45.73	48.52	53.47	0.19	0.97	1.56	1.75
		620	14.06	17.59	19.32	21.45	23.53	25.58	29.54	34.07	39.01	41.66	44.18	46.56	49.34	54.19	0.20	1.01	1.61	1.81
		640	14.38	18.00	19.77	21.94	24.07	26.16	30.20	34.79	39.79	42.45	44.98	47.35	50.10	54.82	0.21	1.04	1.66	1.87
		660	14.69	18.40	20.20	22.43	24.60	26.73	30.83	35.49	40.53	43.20	45.72	48.08	50.79	55.36	0.21	1.07	1.72	1.93
		680	15.00	18.79	20.63	22.90	25.11	27.28	31.45	36.17	41.24	43.92	46.43	48.76	51.42	55.81	0.22	1.10	1.77	1.99
		700	15.30	19.17	21.05	23.36	25.62	27.82	32.05	36.82	41.91	44.59	47.08	49.38	51.98	56.17	0.23	1.14	1.82	2.05
		720	15.59	19.54	21.46	23.81	26.11	28.34	32.63	37.44	42.55	45.22	47.68	49.95	52.47	56.44	0.23	1.17	1.87	2.10
		740	15.88	19.90	21.86	24.25	26.58	28.85	33.19	38.04	43.16	45.80	48.24	50.45	52.89	56.61	0.24	1.20	1.92	2.16
		760	16.16	20.26	22.25	24.68	27.04	29.34	33.73	38.61	43.72	46.35	48.74	50.90	53.24	56.67	0.25	1.23	1.98	2.22
		780	16.44	20.61	22.63	25.10	27.49	29.82	34.25	39.15	44.25	46.84	49.19	51.29	53.52	56.64	0.25	1.27	2.03	2.28
		800	16.71	20.95	23.00	25.50	27.93	30.28	34.75	39.66	44.74	47.30	49.59	51.61	53.73	56.50	0.26	1.30	2.08	2.34
		820	16.97	21.28	23.36	25.90	28.35	30.73	35.23	40.15	45.19	47.70	49.94	51.87			0.27	1.33	2.13	2.40
		840	17.22	21.60	23.71	26.28	28.76	31.16	35.68	40.61	45.60	48.06	50.22	52.07			0.27	1.36	2.18	2.45
		860	17.47	21.91	24.05	26.65	29.16	31.57	36.12	41.04	45.97	48.38	50.46	52.20			0.28	1.40	2.24	2.51
		880	17.71	22.21	24.38	27.00	29.54	31.97	36.53	41.44	46.30	48.64	50.63	52.26			0.29	1.43	2.29	2.57
	⑮	900	17.95	22.51	24.70	27.35	29.90	32.35	36.92	41.81	46.59	48.85	50.74	52.25			0.29	1.46	2.34	2.63
		920	18.18	22.79	25.00	27.68	30.25	32.71	37.29	42.14	46.84	49.01					0.30	1.49	2.39	2.69
		940	18.40	23.07	25.30	28.00	30.59	33.06	37.64	42.45	47.04	49.12					0.31	1.53	2.44	2.75
		960	18.61	23.33	25.59	28.31	30.91	33.39	37.96	42.72	47.19	49.18					0.31	1.56	2.50	2.81
		980	18.82	23.59	25.86	28.60	31.21	33.70	38.26	42.97	47.31	49.18					0.32	1.59	2.55	2.86
		1000	19.02	23.83	26.13	28.88	31.50	33.99	38.53	43.18	47.37	49.13					0.32	1.62	2.60	2.92
		1020	19.21	24.07	26.38	29.15	31.78	34.26	38.78	43.35	47.39						0.33	1.66	2.65	2.98
		1040	19.39	24.30	26.62	29.40	32.04	34.52	39.01	43.49	47.36						0.34	1.69	2.70	3.04
		1060	19.57	24.51	26.85	29.64	32.28	34.76	39.21	43.60	47.29						0.34	1.72	2.76	3.10
		1080	19.74	24.72	27.07	29.87	32.50	34.97	39.38	43.67	47.16						0.35	1.75	2.81	3.16
		1100	19.90	24.92	27.27	30.08	32.71	35.17	39.53	43.71	46.99						0.36	1.79	2.86	3.21
		1120	20.06	25.10	27.47	30.28	32.91	35.35	39.66	43.71							0.36	1.82	2.91	3.27
		1140	20.20	25.28	27.65	30.46	33.08	35.51	39.75	43.67							0.37	1.85	2.96	3.33
		1160	20.34	25.44	27.82	30.63	33.24	35.65	39.82	43.60							0.38	1.88	3.02	3.39
		1180	20.47	25.59	27.98	30.78	33.38	35.77	39.86	43.49							0.38	1.92	3.07	3.45
		1200	20.60	25.74	28.12	30.92	33.50	35.86	39.87	43.34							0.39	1.95	3.12	3.51
	⑳	1220	20.71	25.87	28.25	31.04	33.61	35.94	39.86								0.40	1.98	3.17	3.56
		1240	20.82	25.99	28.37	31.15	33.69	35.99	39.82								0.40	2.01	3.22	3.62
		1260	20.92	26.10	28.48	31.24	33.76	36.03	39.74								0.41	2.05	3.28	3.68
		1280	21.01	26.20	28.57	31.32	33.81	36.04	39.64								0.42	2.08	3.33	3.74
		1300	21.09	26.28	28.65	31.38	33.84	36.03	39.51								0.42	2.11	3.38	3.80
		1320	21.16	26.36	28.72	31.43	33.86	36.00									0.43	2.14	3.43	3.86
		1340	21.23	26.42	28.77	31.45	33.85	35.94									0.44	2.18	3.48	3.92
		1360	21.29	26.47	28.81	31.47	33.82	35.86									0.44	2.21	3.53	3.97
		1380	21.34	26.51	28.83	31.46	33.78	35.76									0.45	2.24	3.59	4.03
		1400	21.37	26.54	28.84	31.44	33.71	35.64									0.45	2.27	3.64	4.09
			㉕			㉚														
							Dynamically balanced (for details see DIN 2211)													

v > 30 m/s.
Please consult our Application Engineering Department.

v [m/s]

Pulleys

 © ARNTZ OPTIBELT GROUP, GERMANY

POWER RATINGS

optibelt VB PROFILE E/40

NOMINAL POWER RATING P_N [kW]

FOR β = 180° AND L_d = 7180 mm

Table 56

Pulleys	v [m/s]	n_k [min⁻¹]	Datum diameter of small pulley d_{dk} [mm] 450	500	560	630	670	710	750	800	850	900	950	1000	Additional power [kW] per belt for speed ratio i 1.01 to 1.05	1.06 to 1.26	1.27 to 1.57	> 1.57
Statically balanced		**700**	26.44	31.70	37.57	43.78	47.00	49.97	52.68	55.67	58.21	60.27	61.83	62.87	0.38	1.92	3.07	3.45
		950	29.78	35.30	40.95	46.07	48.23	49.80	50.75	51.00	50.17	48.20	45.02		0.52	2.60	4.16	4.68
		1450	24.24	26.19	25.31	19.38									0.79	3.97	6.35	7.14
		20	1.47	1.72	2.02	2.37	2.57	2.76	2.96	3.20	3.44	3.68	3.92	4.16	0.01	0.05	0.09	0.10
		40	2.70	3.17	3.74	4.40	4.77	5.14	5.51	5.97	6.42	6.88	7.33	7.78	0.02	0.11	0.18	0.20
		60	3.83	4.52	5.34	6.29	6.83	7.37	7.90	8.57	9.22	9.88	10.53	11.18	0.03	0.16	0.26	0.30
		80	4.90	5.80	6.87	8.10	8.80	9.50	10.19	11.05	11.90	12.75	13.60	14.43	0.04	0.22	0.35	0.39
		100	5.92	7.03	8.34	9.85	10.70	11.55	12.40	13.44	14.49	15.52	16.55	17.57	0.05	0.27	0.44	0.49
		120	6.91	8.21	9.76	11.53	12.54	13.54	14.53	15.77	16.99	18.20	19.41	20.60	0.07	0.33	0.53	0.59
		140	7.87	9.36	11.13	13.17	14.33	15.47	16.61	18.02	19.42	20.80	22.18	23.54	0.08	0.38	0.61	0.69
		160	8.80	10.48	12.47	14.77	16.06	17.35	18.63	20.21	21.78	23.33	24.87	26.39	0.09	0.44	0.70	0.79
		180	9.70	11.57	13.78	16.32	17.76	19.18	20.59	22.34	24.07	25.79	27.48	29.16	0.10	0.49	0.79	0.89
	5	200	10.58	12.63	15.05	17.84	19.41	20.97	22.51	24.42	26.30	28.17	30.01	31.83	0.11	0.55	0.88	0.98
		220	11.43	13.66	16.29	19.32	21.02	22.71	24.37	26.44	28.47	30.48	32.47	34.42	0.12	0.60	0.96	1.08
		240	12.27	14.67	17.51	20.76	22.59	24.40	26.19	28.40	30.58	32.73	34.84	36.93	0.13	0.66	1.05	1.18
		260	13.08	15.66	18.69	22.17	24.12	26.05	27.96	30.31	32.62	34.90	37.14	39.34	0.14	0.71	1.14	1.28
		280	13.88	16.62	19.85	23.54	25.62	27.66	29.68	32.16	34.60	37.00	39.35	41.66	0.15	0.77	1.23	1.38
		300	14.66	17.56	20.98	24.88	27.07	29.23	31.35	33.96	36.52	39.02	41.48	43.88	0.16	0.82	1.31	1.48
		320	15.42	18.48	22.09	26.19	28.49	30.75	32.97	35.70	38.37	40.97	43.52	46.01	0.18	0.88	1.40	1.58
		340	16.16	19.38	23.16	27.46	29.86	32.22	34.54	37.38	40.15	42.85	45.48	48.03	0.19	0.93	1.49	1.67
		360	16.88	20.26	24.21	28.70	31.20	33.65	36.06	39.00	41.86	44.64	47.34	49.95	0.20	0.99	1.58	1.77
		380	17.59	21.11	25.23	29.90	32.49	35.04	37.52	40.55	43.50	46.35	49.10	51.76	0.21	1.04	1.66	1.87
		400	18.28	21.94	26.23	31.06	33.75	36.37	38.93	42.05	45.06	47.97	50.77	53.47	0.22	1.09	1.75	1.97
		420	18.95	22.76	27.19	32.19	34.96	37.66	40.29	43.48	46.55	49.51	52.34	55.05	0.23	1.15	1.84	2.07
	10	440	19.60	23.54	28.13	33.29	36.13	38.90	41.59	44.84	47.97	50.96	53.81	56.52	0.24	1.20	1.93	2.17
		460	20.24	24.31	29.04	34.34	37.26	40.09	42.83	46.14	49.30	52.31	55.17	57.86	0.25	1.26	2.02	2.27
		480	20.86	25.06	29.92	35.36	38.34	41.23	44.02	47.37	50.55	53.57	56.42	59.08	0.26	1.31	2.10	2.36
		500	21.46	25.78	30.78	36.33	39.37	42.31	45.14	48.52	51.72	54.73	57.55	60.16	0.27	1.37	2.19	2.46
		520	22.04	26.48	31.60	37.27	40.36	43.34	46.20	49.60	52.80	55.79	58.57	61.11	0.28	1.42	2.28	2.56
		540	22.61	27.16	32.39	38.17	41.31	44.32	47.20	50.60	53.79	56.75	59.46	61.92	0.30	1.48	2.37	2.66
		560	23.15	27.81	33.15	39.03	42.20	45.24	48.13	51.53	54.69	57.60	60.23	62.59	0.31	1.53	2.45	2.76
		580	23.68	28.44	33.88	39.84	43.04	46.10	48.99	52.38	55.50	58.33	60.87	63.11	0.32	1.59	2.54	2.86
		600	24.19	29.04	34.58	40.61	43.84	46.90	49.79	53.14	56.21	58.96	61.39	63.48	0.33	1.64	2.63	2.95
	15	620	24.68	29.63	35.24	41.34	44.58	47.64	50.51	53.83	56.81	59.46	61.76		0.34	1.70	2.72	3.05
		640	25.15	30.18	35.88	42.02	45.27	48.32	51.17	54.42	57.32	59.85	62.00		0.35	1.75	2.80	3.15
		660	25.60	30.71	36.47	42.65	45.90	48.94	51.75	54.93	57.72	60.12	62.09		0.36	1.81	2.89	3.25
		680	26.03	31.22	37.04	43.24	46.48	49.49	52.25	55.34	58.02	60.26	62.04		0.37	1.86	2.98	3.35
		700	26.44	31.70	37.57	43.78	47.00	49.97	52.68	55.67	58.21	60.27	61.83		0.38	1.92	3.07	3.45
		720	26.84	32.15	38.06	44.27	47.47	50.39	53.02	55.90					0.39	1.97	3.15	3.55
		740	27.21	32.57	38.52	44.71	47.87	50.73	53.29	56.03					0.41	2.03	3.24	3.64
		760	27.56	32.97	38.94	45.10	48.22	51.01	53.47	56.06					0.42	2.08	3.33	3.74
		780	27.89	33.34	39.32	45.44	48.50	51.21	53.57	55.99					0.43	2.14	3.42	3.84
		800	28.19	33.68	39.66	45.73	48.72	51.34	53.59	55.82					0.44	2.19	3.50	3.94
		820	28.48	34.00	39.97	45.96	48.87	51.40							0.45	2.24	3.59	4.04
	20	840	28.74	34.28	40.23	46.13	48.96	51.38							0.46	2.30	3.68	4.14
		860	28.98	34.54	40.46	46.25	48.99	51.27							0.47	2.35	3.77	4.24
		880	29.20	34.76	40.64	46.32	48.94	51.09							0.48	2.41	3.86	4.33
		900	29.39	34.95	40.78	46.32	48.83	50.83							0.49	2.46	3.94	4.43
		920	29.57	35.11	40.88	46.27									0.50	2.52	4.03	4.53
		940	29.71	35.24	40.94	46.15									0.51	2.57	4.12	4.63
		960	29.84	35.34	40.95	45.98									0.53	2.63	4.21	4.73
		980	29.93	35.41	40.91	45.74									0.54	2.68	4.29	4.83
		1000	30.01	35.44	40.83	45.43									0.55	2.74	4.38	4.92
		1020	30.06	35.44	40.71	45.07									0.56	2.79	4.47	5.02
		1040	30.08	35.40	40.53	44.63									0.57	2.85	4.56	5.12
	25	1060	30.07	35.33	40.31	44.13									0.58	2.90	4.64	5.22
		1080	30.04	35.22	40.04	43.56									0.59	2.96	4.73	5.32
		1100	29.99	35.08	39.72	42.93									0.60	3.01	4.82	5.42
		1120	29.90	34.90	39.35										0.61	3.07	4.91	5.52
		1140	29.79	34.68	38.93										0.62	3.12	4.99	5.61
		1160	29.65	34.43	38.46										0.64	3.18	5.08	5.71
		1180	29.48	34.14	37.93										0.65	3.23	5.17	5.81
		1200	29.29	33.81	37.36										0.66	3.28	5.26	5.91
		1220	29.06	33.44											0.67	3.34	5.34	6.01
		1240	28.80	33.03											0.68	3.39	5.43	6.11
		1260	28.52	32.58											0.69	3.45	5.52	6.21
	30	1280	28.20	32.09											0.70	3.50	5.61	6.30
		1300	27.86	31.55											0.71	3.56	5.70	6.40
												v > 30 m/s. Please consult our Application Engineering Department.						
																		v [m/s]
			Dynamically balanced (for details see DIN 2211)															Pulleys

optibelt VB

POWER RATINGS

optibelt SUPER X-POWER M=S PROFILE XPZ, 3VX, 9JX

NOMINAL POWER RATING P_N [kW]

FOR β = 180° AND L_d = 1600 mm

Table 57

Pulleys	v [m/s]	n_k [min⁻¹]	Datum diameter of small pulley d_{dk} [mm] 56	60	63	71	80	85	90	95	100	112	125	140	160	180	200	Additional power [kW] per belt for speed ratio i 1.01 to 1.05	1.06 to 1.26	1.27 to 1.57	> 1.57
Statically balanced		**700**	0.72	0.84	0.92	1.14	1.39	1.53	1.80	1.94	2.26	2.42	2.61	3.00	3.51	4.02	4.53	0.01	0.06	0.08	0.10
		950	0.92	1.07	1.18	1.48	1.80	1.98	2.34	2.52	2.94	3.15	3.39	3.91	4.58	5.25	5.90	0.01	0.08	0.11	0.13
		1450	1.27	1.49	1.65	2.08	2.56	2.83	3.35	3.60	4.22	4.52	4.87	5.61	6.58	7.52	8.44	0.02	0.12	0.16	0.20
		2850	2.07	2.46	2.76	3.54	4.39	4.86	5.78	6.24	7.30	7.82	8.42	9.67	11.26	12.77	14.17	0.04	0.23	0.32	0.40
		100	0.14	0.16	0.18	0.22	0.26	0.28	0.33	0.35	0.41	0.43	0.46	0.53	0.62	0.71	0.80	0.00	0.01	0.01	0.01
		200	0.26	0.30	0.32	0.39	0.47	0.52	0.61	0.65	0.75	0.80	0.86	0.99	1.16	1.32	1.49	0.00	0.02	0.02	0.03
		300	0.36	0.42	0.46	0.56	0.67	0.74	0.87	0.93	1.08	1.15	1.24	1.42	1.66	1.90	2.14	0.00	0.02	0.03	0.04
		400	0.46	0.53	0.58	0.71	0.86	0.95	1.11	1.19	1.39	1.48	1.60	1.83	2.15	2.46	2.76	0.00	0.03	0.05	0.06
		500	0.55	0.64	0.70	0.86	1.05	1.15	1.35	1.45	1.69	1.81	1.94	2.23	2.62	2.99	3.37	0.01	0.04	0.06	0.07
		600	0.64	0.74	0.81	1.01	1.22	1.34	1.58	1.70	1.98	2.12	2.28	2.62	3.07	3.51	3.95	0.01	0.05	0.07	0.08
		700	0.72	0.84	0.92	1.14	1.39	1.53	1.80	1.94	2.26	2.42	2.61	3.00	3.51	4.02	4.53	0.01	0.06	0.08	0.10
		800	0.80	0.93	1.03	1.28	1.56	1.72	2.02	2.18	2.54	2.72	2.93	3.37	3.95	4.52	5.08	0.01	0.06	0.09	0.11
		900	0.88	1.02	1.13	1.41	1.72	1.90	2.24	2.41	2.81	3.01	3.24	3.73	4.37	5.01	5.63	0.01	0.07	0.10	0.13
		1000	0.96	1.11	1.23	1.54	1.88	2.07	2.45	2.63	3.08	3.29	3.55	4.09	4.79	5.48	6.17	0.01	0.08	0.11	0.14
		1100	1.03	1.20	1.33	1.66	2.04	2.24	2.65	2.86	3.34	3.57	3.85	4.43	5.20	5.95	6.69	0.01	0.09	0.12	0.15
		1200	1.10	1.28	1.42	1.79	2.19	2.41	2.86	3.07	3.59	3.85	4.15	4.78	5.60	6.41	7.21	0.01	0.10	0.14	0.17
		1300	1.17	1.37	1.52	1.91	2.34	2.58	3.05	3.29	3.84	4.12	4.44	5.11	6.00	6.86	7.71	0.02	0.10	0.15	0.18
		1400	1.24	1.45	1.61	2.03	2.49	2.74	3.25	3.50	4.09	4.39	4.73	5.45	6.38	7.30	8.20	0.02	0.11	0.16	0.19
		1500	1.30	1.53	1.70	2.14	2.63	2.91	3.44	3.71	4.34	4.65	5.01	5.77	6.77	7.74	8.69	0.02	0.12	0.17	0.21
		1600	1.37	1.61	1.78	2.25	2.78	3.06	3.63	3.91	4.58	4.91	5.29	6.09	7.14	8.16	9.16	0.02	0.13	0.18	0.22
		1700	1.43	1.68	1.87	2.37	2.92	3.22	3.82	4.11	4.82	5.16	5.56	6.41	7.51	8.58	9.62	0.02	0.14	0.19	0.24
	⑤	1800	1.49	1.76	1.95	2.48	3.06	3.37	4.00	4.31	5.05	5.41	5.83	6.72	7.87	8.99	10.07	0.02	0.14	0.20	0.25
		1900	1.55	1.83	2.04	2.59	3.19	3.53	4.18	4.51	5.28	5.66	6.10	7.02	8.22	9.39	10.52	0.02	0.15	0.22	0.26
		2000	1.61	1.90	2.12	2.69	3.33	3.67	4.36	4.70	5.51	5.90	6.36	7.32	8.57	9.78	10.95	0.02	0.16	0.23	0.28
		2100	1.67	1.97	2.20	2.80	3.46	3.82	4.54	4.89	5.73	6.14	6.62	7.62	8.91	10.16	11.37	0.03	0.17	0.24	0.29
		2200	1.72	2.04	2.28	2.90	3.59	3.97	4.71	5.08	5.95	6.38	6.87	7.91	9.25	10.54	11.78	0.03	0.18	0.25	0.31
		2300	1.78	2.11	2.36	3.00	3.72	4.11	4.88	5.26	6.17	6.61	7.12	8.19	9.58	10.91	12.18	0.03	0.18	0.26	0.32
		2400	1.83	2.18	2.43	3.10	3.84	4.25	5.05	5.45	6.38	6.84	7.37	8.47	9.90	11.26	12.57	0.03	0.19	0.27	0.33
		2500	1.89	2.24	2.51	3.20	3.97	4.39	5.22	5.63	6.59	7.06	7.61	8.75	10.22	11.61	12.94	0.03	0.20	0.28	0.35
		2600	1.94	2.31	2.58	3.30	4.09	4.53	5.38	5.80	6.80	7.29	7.85	9.02	10.52	11.95	13.31	0.03	0.21	0.30	0.36
		2700	1.99	2.37	2.65	3.39	4.21	4.66	5.54	5.98	7.00	7.50	8.08	9.29	10.83	12.29	13.66	0.03	0.22	0.31	0.38
		2800	2.04	2.43	2.72	3.49	4.33	4.80	5.70	6.15	7.20	7.72	8.31	9.55	11.12	12.61	14.01	0.03	0.22	0.32	0.39
		2900	2.09	2.49	2.79	3.58	4.45	4.93	5.86	6.32	7.40	7.93	8.54	9.80	11.41	12.92	14.34	0.04	0.23	0.33	0.40
		3000	2.14	2.55	2.86	3.67	4.57	5.06	6.02	6.49	7.60	8.14	8.76	10.05	11.69	13.22	14.65	0.04	0.24	0.34	0.42
		3100	2.19	2.61	2.93	3.76	4.68	5.18	6.17	6.65	7.79	8.34	8.98	10.29	11.96	13.52	14.96	0.04	0.25	0.35	0.43
		3200	2.23	2.67	3.00	3.85	4.80	5.31	6.32	6.81	7.97	8.54	9.19	10.53	12.23	13.80	15.25	0.04	0.26	0.36	0.45
		3300	2.28	2.73	3.06	3.94	4.91	5.43	6.47	6.97	8.16	8.74	9.40	10.77	12.49	14.08	15.53	0.04	0.26	0.37	0.46
		3400	2.32	2.79	3.13	4.03	5.02	5.56	6.61	7.13	8.34	8.93	9.60	11.00	12.74	14.34	15.79	0.04	0.27	0.39	0.47
	⑩	3500	2.37	2.84	3.19	4.11	5.13	5.68	6.76	7.28	8.52	9.12	9.81	11.22	12.98	14.59	16.04	0.04	0.28	0.40	0.49
		3600	2.41	2.90	3.25	4.20	5.23	5.80	6.90	7.44	8.70	9.31	10.00	11.44	13.22	14.83	16.28	0.04	0.29	0.41	0.50
		3700	2.45	2.95	3.32	4.28	5.34	5.91	7.04	7.59	8.87	9.49	10.20	11.65	13.44	15.07	16.50	0.05	0.30	0.42	0.52
		3800	2.50	3.00	3.38	4.36	5.44	6.03	7.17	7.73	9.04	9.67	10.38	11.85	13.66	15.29	16.71	0.05	0.30	0.43	0.53
		3900	2.54	3.05	3.44	4.44	5.54	6.14	7.31	7.88	9.20	9.84	10.57	12.05	13.87	15.50	16.90	0.05	0.31	0.44	0.54
		4000	2.58	3.10	3.49	4.52	5.64	6.25	7.44	8.02	9.36	10.01	10.75	12.25	14.08	15.69	17.08	0.05	0.32	0.45	0.56
		4100	2.61	3.15	3.55	4.60	5.74	6.36	7.57	8.16	9.52	10.18	10.92	12.44	14.27	15.88	17.24	0.05	0.33	0.47	0.57
		4200	2.65	3.20	3.61	4.67	5.84	6.47	7.70	8.29	9.67	10.34	11.09	12.62	14.46	16.05	17.39	0.05	0.34	0.48	0.58
		4300	2.69	3.25	3.66	4.75	5.93	6.57	7.82	8.43	9.83	10.50	11.26	12.79	14.63	16.22	17.52	0.05	0.34	0.49	0.60
		4400	2.73	3.30	3.72	4.82	6.03	6.68	7.94	8.56	9.97	10.65	11.42	12.96	14.80	16.37	17.63	0.05	0.35	0.50	0.61
		4500	2.76	3.34	3.77	4.89	6.12	6.78	8.06	8.68	10.12	10.80	11.58	13.13	14.96	16.50	17.73	0.06	0.36	0.51	0.63
		4600	2.80	3.39	3.82	4.97	6.21	6.88	8.18	8.81	10.26	10.95	11.73	13.28	15.11	16.63	17.81	0.06	0.37	0.52	0.64
		4700	2.83	3.43	3.87	5.03	6.30	6.98	8.30	8.93	10.40	11.09	11.87	13.43	15.25	16.74	17.87	0.06	0.38	0.53	0.65
		4800	2.86	3.47	3.93	5.10	6.38	7.07	8.41	9.05	10.53	11.23	12.02	13.58	15.38	16.84	17.92	0.06	0.38	0.54	0.67
		4900	2.90	3.52	3.97	5.17	6.47	7.17	8.52	9.17	10.66	11.36	12.15	13.71	15.50	16.92	17.94	0.06	0.39	0.56	0.68
		5000	2.93	3.56	4.02	5.24	6.55	7.26	8.63	9.28	10.78	11.49	12.28	13.84	15.61	17.00	17.95	0.06	0.40	0.57	0.70
		5100	2.96	3.60	4.07	5.30	6.63	7.35	8.73	9.39	10.90	11.62	12.41	13.97	15.72	17.05	17.94	0.06	0.41	0.58	0.71
	⑮	5200	2.99	3.64	4.12	5.36	6.71	7.44	8.83	9.50	11.02	11.74	12.53	14.08	15.81	17.10	17.91	0.06	0.42	0.59	0.72
		5300	3.02	3.68	4.16	5.43	6.79	7.53	8.93	9.61	11.14	11.85	12.65	14.19	15.89	17.13		0.07	0.42	0.60	0.74
		5400	3.05	3.71	4.21	5.49	6.87	7.61	9.03	9.71	11.25	11.96	12.76	14.30	15.96	17.14		0.07	0.43	0.61	0.75
		5500	3.07	3.75	4.25	5.55	6.94	7.69	9.12	9.81	11.35	12.07	12.87	14.39	16.02	17.14		0.07	0.44	0.62	0.77
		5600	3.10	3.79	4.29	5.60	7.02	7.77	9.22	9.90	11.45	12.17	12.97	14.48	16.07	17.13		0.07	0.45	0.64	0.78
		5800	3.15	3.86	4.37	5.72	7.16	7.93	9.39	10.09	11.64	12.36	13.15	14.63	16.14	17.06		0.07	0.46	0.66	0.81
		6000	3.20	3.92	4.45	5.82	7.29	8.07	9.56	10.26	11.82	12.53	13.31	14.75	16.16			0.07	0.48	0.68	0.84
		6200	3.24	3.98	4.52	5.92	7.42	8.21	9.71	10.42	11.98	12.69	13.45	14.84	16.13			0.08	0.50	0.70	0.86
		6400	3.29	4.04	4.59	6.02	7.54	8.34	9.85	10.56	12.12	12.82	13.56	14.90	16.06			0.08	0.51	0.73	0.89
		6600	3.33	4.09	4.66	6.11	7.65	8.46	9.98	10.69	12.24	12.93	13.65	14.92				0.08	0.53	0.75	0.92
		6800	3.36	4.14	4.72	6.20	7.76	8.57	10.10	10.81	12.34	13.01	13.72	14.91				0.08	0.54	0.77	0.95
	⑳	7000	3.39	4.19	4.77	6.27	7.85	8.68	10.21	10.91	12.43	13.08	13.76	14.87	$v_{max} \leq 55$ m/s			0.09	0.56	0.79	0.97
		7200	3.42	4.23	4.83	6.35	7.94	8.77	10.30	11.00	12.49	13.13	13.77	14.79				0.09	0.58	0.82	1.00
		7400	3.45	4.27	4.87	6.41	8.02	8.86	10.39	11.08	12.54	13.15	13.76	14.67				0.09	0.59	0.84	1.03
		7600	3.47	4.31	4.92	6.48	8.10	8.93	10.46	11.14	12.56	13.15	13.72		v > 42 m/s.			0.09	0.61	0.86	1.06
		7800	3.49	4.34	4.96	6.53	8.16	9.00	10.51	11.19	12.57	13.12	13.65		Please consult our			0.10	0.62	0.89	1.09
		8000	3.50	4.36	4.99	6.58	8.22	9.05	10.56	11.22	12.55	13.08	13.56		Application Engineering			0.10	0.64	0.91	1.11
		8200	3.51	4.39	5.02	6.62	8.26	9.10	10.59	11.23	12.52	13.00	13.43		Department.			0.10	0.66	0.93	1.14
		8400	3.52	4.40	5.04	6.66	8.30	9.13	10.60	11.23	12.46	12.90	13.28					0.10	0.67	0.95	1.17
			㉕			㉚	㉟			㊵											v [m/s]
						Dynamically balanced (for details see DIN 2211)															Pulleys

Note: Pulley diameters shown are outside diameters for section 3VX.

optibelt SUPER X-POWER M=S

POWER RATINGS

optibelt SUPER X-POWER M=S PROFILE XPA

NOMINAL POWER RATING P_N [kW]

FOR β = 180° AND L_d = 2500 mm

Table 58

Pulleys	v [m/s]	n_k [min⁻¹]	Datum diameter of small pulley d_{dk} [mm] 71	80	85	95	100	112	118	125	140	160	180	200	224	250	280	Additional power [kW] per belt for speed ratio i 1.01 to 1.05	1.06 to 1.26	1.27 to 1.57	> 1.57
Statically balanced		**700**	1.12	1.55	1.78	2.25	2.48	3.04	3.31	3.63	4.32	5.22	6.11	7.00	8.05	9.18	10.46	0.02	0.13	0.19	0.23
		950	1.43	2.00	2.31	2.94	3.24	3.98	4.35	4.77	5.68	6.87	8.05	9.22	10.60	12.08	13.76	0.03	0.18	0.26	0.31
		1450	2.01	2.84	3.31	4.22	4.68	5.77	6.31	6.93	8.26	10.00	11.71	13.39	15.37	17.46	19.81	0.04	0.27	0.39	0.48
		2850	3.31	4.85	5.70	7.37	8.20	10.15	11.11	12.21	14.52	17.49	20.31	22.98	25.96	28.88	31.84	0.08	0.54	0.77	0.94
		100	0.22	0.28	0.32	0.40	0.43	0.52	0.57	0.62	0.73	0.87	1.02	1.16	1.33	1.52	1.73	0.00	0.02	0.03	0.03
		200	0.39	0.52	0.60	0.74	0.81	0.98	1.07	1.17	1.38	1.66	1.94	2.21	2.54	2.89	3.30	0.01	0.04	0.05	0.07
		300	0.55	0.75	0.85	1.06	1.17	1.42	1.54	1.69	2.00	2.41	2.81	3.22	3.70	4.21	4.81	0.01	0.06	0.08	0.10
		400	0.70	0.96	1.10	1.37	1.51	1.84	2.00	2.19	2.60	3.13	3.67	4.19	4.82	5.50	6.27	0.01	0.08	0.11	0.13
		500	0.85	1.16	1.33	1.67	1.84	2.25	2.45	2.68	3.18	3.84	4.50	5.15	5.92	6.75	7.70	0.01	0.09	0.13	0.16
		600	0.99	1.36	1.56	1.96	2.16	2.65	2.88	3.16	3.75	4.54	5.31	6.08	6.99	7.97	9.09	0.02	0.11	0.16	0.20
		700	1.12	1.55	1.78	2.25	2.48	3.04	3.31	3.63	4.32	5.22	6.11	7.00	8.05	9.18	10.46	0.02	0.13	0.19	0.23
		800	1.25	1.73	2.00	2.53	2.79	3.42	3.73	4.09	4.87	5.89	6.90	7.90	9.08	10.35	11.80	0.02	0.15	0.22	0.26
		900	1.37	1.91	2.21	2.80	3.09	3.80	4.14	4.55	5.41	6.55	7.67	8.78	10.10	11.51	13.11	0.03	0.17	0.24	0.30
		1000	1.50	2.09	2.42	3.07	3.39	4.17	4.55	5.00	5.94	7.20	8.43	9.65	11.10	12.64	14.39	0.03	0.19	0.27	0.33
		1100	1.61	2.26	2.62	3.33	3.69	4.53	4.95	5.44	6.47	7.83	9.18	10.51	12.08	13.75	15.65	0.03	0.21	0.30	0.36
		1200	1.73	2.43	2.82	3.59	3.98	4.89	5.34	5.87	6.99	8.46	9.92	11.35	13.04	14.84	16.87	0.04	0.23	0.32	0.40
	5	1300	1.84	2.60	3.02	3.85	4.26	5.24	5.73	6.30	7.50	9.09	10.64	12.18	13.99	15.91	18.07	0.04	0.25	0.35	0.43
		1400	1.95	2.76	3.21	4.10	4.54	5.59	6.12	6.72	8.01	9.70	11.36	12.99	14.92	16.95	19.23	0.04	0.27	0.38	0.46
		1500	2.06	2.92	3.40	4.35	4.82	5.94	6.49	7.14	8.50	10.30	12.06	13.79	15.82	17.97	20.37	0.04	0.28	0.40	0.49
		1600	2.16	3.08	3.59	4.59	5.09	6.28	6.87	7.55	9.00	10.89	12.75	14.58	16.71	18.96	21.47	0.05	0.30	0.43	0.53
		1700	2.27	3.24	3.77	4.83	5.36	6.61	7.23	7.95	9.48	11.48	13.43	15.34	17.58	19.93	22.53	0.05	0.32	0.46	0.56
		1800	2.37	3.39	3.95	5.07	5.63	6.94	7.60	8.35	9.96	12.05	14.10	16.10	18.43	20.87	23.56	0.05	0.34	0.48	0.59
		1900	2.47	3.54	4.13	5.31	5.89	7.27	7.96	8.75	10.43	12.62	14.75	16.84	19.26	21.78	24.55	0.06	0.36	0.51	0.63
		2000	2.56	3.69	4.31	5.54	6.15	7.59	8.31	9.14	10.89	13.17	15.40	17.56	20.06	22.66	25.50	0.06	0.38	0.54	0.66
		2100	2.66	3.83	4.48	5.77	6.40	7.91	8.66	9.52	11.34	13.72	16.03	18.26	20.85	23.52	26.42	0.06	0.40	0.56	0.69
		2200	2.75	3.98	4.65	5.99	6.65	8.22	9.00	9.90	11.79	14.26	16.64	18.95	21.61	24.34	27.29	0.06	0.42	0.59	0.73
		2300	2.84	4.12	4.82	6.21	6.90	8.53	9.34	10.27	12.23	14.78	17.25	19.62	22.35	25.13	28.12	0.07	0.44	0.62	0.76
		2400	2.93	4.26	4.99	6.43	7.14	8.84	9.67	10.64	12.67	15.30	17.84	20.28	23.06	25.89	28.90	0.07	0.45	0.65	0.79
		2500	3.02	4.39	5.15	6.64	7.38	9.14	10.00	11.00	13.09	15.81	18.41	20.91	23.75	26.62	29.64	0.07	0.47	0.67	0.82
		2600	3.10	4.53	5.31	6.86	7.62	9.43	10.32	11.35	13.51	16.30	18.97	21.53	24.41	27.31	30.33	0.08	0.49	0.70	0.86
		2700	3.19	4.66	5.47	7.07	7.85	9.72	10.64	11.70	13.92	16.79	19.52	22.12	25.05	27.97	30.97	0.08	0.51	0.73	0.89
	10	2800	3.27	4.79	5.62	7.27	8.08	10.01	10.95	12.04	14.33	17.26	20.05	22.70	25.66	28.59	31.56	0.08	0.53	0.75	0.92
		2900	3.35	4.92	5.78	7.47	8.31	10.29	11.26	12.38	14.72	17.72	20.57	23.25	26.24	29.17	32.10	0.08	0.55	0.78	0.96
		3000	3.43	5.04	5.93	7.67	8.53	10.56	11.56	12.71	15.11	18.17	21.07	23.79	26.80	29.71	32.59	0.09	0.57	0.81	0.99
		3100	3.50	5.16	6.07	7.87	8.75	10.84	11.86	13.03	15.49	18.61	21.55	24.30	27.32	30.21	33.02	0.09	0.59	0.83	1.02
		3200	3.58	5.28	6.22	8.06	8.97	11.10	12.15	13.35	15.86	19.04	22.02	24.80	27.82	30.68	33.39	0.09	0.61	0.86	1.05
		3300	3.65	5.40	6.36	8.25	9.18	11.36	12.43	13.66	16.22	19.45	22.47	25.26	28.28	31.10	33.71	0.10	0.63	0.89	1.09
		3400	3.72	5.52	6.50	8.43	9.38	11.62	12.71	13.97	16.57	19.85	22.91	25.71	28.71	31.47	33.96	0.10	0.64	0.91	1.12
		3500	3.79	5.63	6.64	8.62	9.59	11.87	12.99	14.26	16.91	20.24	23.32	26.13	29.11	31.80	34.16	0.10	0.66	0.94	1.15
		3600	3.86	5.74	6.77	8.79	9.79	12.12	13.26	14.56	17.25	20.62	23.72	26.53	29.47	32.09	34.29	0.11	0.68	0.97	1.19
		3700	3.92	5.85	6.90	8.97	9.98	12.36	13.52	14.84	17.57	20.98	24.10	26.90	29.81	32.33	34.35	0.11	0.70	0.99	1.22
		3800	3.99	5.96	7.03	9.14	10.17	12.60	13.77	15.12	17.89	21.33	24.46	27.25	30.10	32.52		0.11	0.72	1.02	1.25
		3900	4.05	6.06	7.16	9.31	10.36	12.83	14.02	15.39	18.19	21.67	24.81	27.58	30.36	32.66		0.11	0.74	1.05	1.29
		4000	4.11	6.16	7.28	9.47	10.55	13.05	14.27	15.65	18.49	21.99	25.13	27.87	30.59	32.75		0.12	0.76	1.08	1.32
	15	4100	4.17	6.26	7.40	9.63	10.73	13.27	14.50	15.91	18.78	22.30	25.43	28.14	30.77	32.79		0.12	0.78	1.10	1.35
		4200	4.22	6.36	7.52	9.79	10.90	13.48	14.73	16.15	19.05	22.59	25.71	28.38	30.92	32.78		0.12	0.80	1.13	1.38
		4300	4.28	6.45	7.63	9.94	11.07	13.69	14.96	16.39	19.32	22.87	25.97	28.59	31.03			0.13	0.81	1.16	1.42
		4400	4.33	6.54	7.75	10.09	11.24	13.90	15.18	16.63	19.57	23.13	26.21	28.78	31.10			0.13	0.83	1.18	1.45
		4500	4.38	6.63	7.86	10.24	11.40	14.09	15.39	16.85	19.82	23.38	26.43	28.93	31.13			0.13	0.85	1.21	1.48
		4600	4.43	6.72	7.96	10.38	11.56	14.28	15.59	17.07	20.05	23.61	26.63	29.06	31.12			0.13	0.87	1.24	1.52
		4700	4.48	6.80	8.06	10.52	11.71	14.47	15.79	17.28	20.27	23.82	26.80	29.15				0.14	0.89	1.26	1.55
		4800	4.52	6.88	8.17	10.65	11.86	14.65	15.98	17.48	20.49	24.02	26.95	29.22				0.14	0.91	1.29	1.58
		4900	4.56	6.96	8.26	10.78	12.01	14.82	16.16	17.67	20.69	24.20	27.08	29.25				0.14	0.93	1.32	1.62
		5000	4.60	7.04	8.36	10.91	12.14	14.99	16.34	17.85	20.87	24.36	27.18	29.25				0.15	0.95	1.34	1.65
		5100	4.64	7.11	8.45	11.03	12.28	15.14	16.51	18.03	21.05	24.51	27.26	29.21				0.15	0.97	1.37	1.68
		5200	4.68	7.18	8.54	11.15	12.41	15.30	16.67	18.20	21.21	24.64	27.31	29.15				0.15	0.98	1.40	1.71
	20	5300	4.72	7.25	8.62	11.26	12.54	15.44	16.82	18.35	21.37	24.75	27.34					0.16	1.00	1.42	1.75
		5400	4.75	7.32	8.70	11.37	12.66	15.58	16.97	18.50	21.51	24.85	27.35					0.16	1.02	1.45	1.78
		5500	4.78	7.38	8.78	11.48	12.77	15.72	17.10	18.64	21.63	24.92	27.32					0.16	1.04	1.48	1.81
		5600	4.81	7.44	8.86	11.58	12.88	15.84	17.23	18.77	21.75	24.98	27.27					0.16	1.06	1.51	1.85
		5700	4.84	7.50	8.93	11.67	12.99	15.96	17.35	18.89	21.85	25.02	27.20					0.17	1.08	1.53	1.88
		5800	4.86	7.55	9.00	11.77	13.09	16.08	17.47	19.00	21.94	25.03	27.10					0.17	1.10	1.56	1.91
		5900	4.88	7.60	9.06	11.85	13.18	16.18	17.57	19.10	22.01	25.03						0.17	1.12	1.59	1.94
		6000	4.90	7.65	9.12	11.93	13.27	16.28	17.67	19.19	22.07	25.01						0.18	1.14	1.61	1.98
		6100	4.92	7.70	9.18	12.01	13.36	16.37	17.76	19.27	22.12	24.97						0.18	1.16	1.64	2.01
		6200	4.94	7.74	9.24	12.09	13.43	16.45	17.84	19.35	22.15	24.90						0.18	1.17	1.67	2.04
		6300	4.95	7.78	9.29	12.15	13.51	16.53	17.91	19.41	22.17	24.82						0.18	1.19	1.69	2.08
		6400	4.96	7.82	9.34	12.22	13.58	16.60	17.97	19.46	22.17	24.72			$v_{max} \leq 55$ m/s			0.19	1.21	1.72	2.11
		6500	4.97	7.85	9.38	12.28	13.64	16.66	18.02	19.50	22.16	24.59						0.19	1.23	1.75	2.14
		6600	4.98	7.88	9.42	12.33	13.69	16.71	18.07	19.53	22.14							0.19	1.25	1.77	2.18
	25	6700	4.98	7.91	9.46	12.38	13.74	16.75	18.10	19.54	22.10				v > 42 m/s.			0.20	1.27	1.80	2.21
		6800	4.99	7.93	9.49	12.42	13.79	16.79	18.13	19.55	22.04				Please consult our			0.20	1.29	1.83	2.24
		6900	4.99	7.95	9.52	12.46	13.83	16.82	18.15	19.55	21.97				Application Engineering			0.20	1.31	1.86	2.27
		7000	4.99	7.97	9.55	12.49	13.86	16.84	18.15	19.53	21.89				Department.			0.21	1.33	1.88	2.31
						30	35	40													v [m/s]
						Dynamically balanced (for details see DIN 2211)															Pulleys

optibelt SUPER X-POWER

POWER RATINGS

optibelt SUPER X-POWER M=S PROFILE XPB, 5VX, 15JX

NOMINAL POWER RATING P_N [kW]

FOR β = 180° AND L_d = 3550 mm

Table 59

Pulleys	v [m/s]	n_k [min⁻¹]	Datum diameter of small pulley d_{dk} [mm] 112	118	125	140	150	160	180	200	224	250	280	315	400	Additional power [kW] per belt for speed ratio i 1.01 to 1.05	1.06 to 1.26	1.27 to 1.57	> 1.57
Statically balanced		**700**	3.32	3.76	4.27	5.36	6.09	6.81	8.26	9.69	11.40	13.24	15.34	17.77	23.56	0.04	0.29	0.41	0.50
		950	4.38	4.97	5.66	7.12	8.09	9.06	10.98	12.89	15.16	17.59	20.36	23.54	31.02	0.06	0.39	0.55	0.68
		1450	6.41	7.29	8.31	10.49	11.92	13.35	16.18	18.96	22.25	25.73	29.65	34.07	44.02	0.09	0.59	0.84	1.03
		2850	11.36	12.96	14.80	18.67	21.18	23.64	28.40	32.90	37.94	42.92	47.97	52.80		0.18	1.17	1.65	2.03
		100	0.55	0.61	0.69	0.86	0.97	1.08	1.30	1.52	1.78	2.07	2.39	2.77	3.69	0.01	0.04	0.06	0.07
		200	1.04	1.17	1.33	1.65	1.87	2.09	2.52	2.95	3.46	4.02	4.65	5.40	7.19	0.01	0.08	0.12	0.14
		300	1.52	1.71	1.94	2.42	2.74	3.06	3.70	4.34	5.10	5.92	6.86	7.96	10.6	0.02	0.12	0.17	0.21
		400	1.98	2.24	2.54	3.17	3.60	4.02	4.87	5.71	6.71	7.79	9.03	10.48	13.94	0.03	0.16	0.23	0.28
		500	2.43	2.75	3.12	3.92	4.44	4.97	6.01	7.05	8.29	9.63	11.17	12.95	17.22	0.03	0.20	0.29	0.36
		600	2.88	3.26	3.70	4.64	5.27	5.90	7.14	8.38	9.86	11.45	13.27	15.38	20.42	0.04	0.25	0.35	0.43
		700	3.32	3.76	4.27	5.36	6.09	6.81	8.26	9.69	11.40	13.24	15.34	17.77	23.56	0.04	0.29	0.41	0.50
		800	3.75	4.25	4.83	6.07	6.90	7.72	9.36	10.98	12.92	15	17.37	20.11	26.61	0.05	0.33	0.46	0.57
	5	900	4.17	4.73	5.39	6.78	7.70	8.62	10.44	12.26	14.42	16.73	19.37	22.41	29.57	0.06	0.37	0.52	0.64
		1000	4.59	5.21	5.93	7.47	8.49	9.50	11.52	13.52	15.89	18.44	21.34	24.66	32.45	0.06	0.41	0.58	0.71
		1100	5.01	5.69	6.47	8.15	9.27	10.38	12.58	14.76	17.35	20.12	23.26	26.85	35.22	0.07	0.45	0.64	0.78
		1200	5.42	6.15	7.01	8.83	10.04	11.24	13.62	15.98	18.78	21.76	25.14	28.99	37.88	0.08	0.49	0.70	0.85
		1300	5.82	6.61	7.54	9.50	10.80	12.09	14.66	17.19	20.19	23.38	26.98	31.07	40.43	0.08	0.53	0.75	0.93
		1400	6.22	7.07	8.06	10.16	11.55	12.93	15.67	18.38	21.57	24.96	28.77	33.09	42.86	0.09	0.57	0.81	1.00
		1500	6.61	7.52	8.57	10.81	12.29	13.76	16.67	19.54	22.92	26.5	30.52	35.03	45.15	0.09	0.61	0.87	1.07
		1600	7.00	7.96	9.08	11.45	13.02	14.58	17.66	20.69	24.25	28.01	32.21	36.91	47.31	0.10	0.65	0.93	1.14
		1700	7.38	8.40	9.58	12.09	13.74	15.39	18.63	21.81	25.54	29.47	33.85	38.72	49.32	0.11	0.70	0.99	1.21
	10	1800	7.76	8.83	10.07	12.71	14.45	16.18	19.58	22.91	26.81	30.9	35.43	40.44	51.17	0.11	0.74	1.05	1.28
		1900	8.13	9.25	10.56	13.33	15.15	16.96	20.52	23.99	28.05	32.28	36.96	42.08	52.85	0.12	0.78	1.10	1.35
		2000	8.49	9.67	11.04	13.94	15.84	17.73	21.43	25.05	29.25	33.62	38.42	43.64	54.37	0.13	0.82	1.16	1.42
		2100	8.85	10.08	11.51	14.53	16.52	18.48	22.33	26.08	30.42	34.92	39.82	45.1	55.70	0.13	0.86	1.22	1.50
		2200	9.21	10.49	11.98	15.12	17.18	19.22	23.21	27.08	31.55	36.16	41.15	46.47	56.84	0.14	0.90	1.28	1.57
		2300	9.56	10.89	12.43	15.69	17.83	19.94	24.07	28.06	32.65	37.35	42.41	47.75	57.79	0.15	0.94	1.34	1.64
		2400	9.90	11.28	12.88	16.26	18.47	20.65	24.90	29.00	33.70	38.49	43.6	48.92	58.53	0.15	0.98	1.39	1.71
	15	2500	10.23	11.67	13.32	16.82	19.10	21.35	25.72	29.92	34.72	39.58	44.71	49.98	59.05	0.16	1.02	1.45	1.78
		2600	10.56	12.04	13.76	17.36	19.71	22.02	26.51	30.81	35.70	40.61	45.74	50.93	59.35	0.16	1.06	1.51	1.85
		2700	10.89	12.42	14.18	17.89	20.31	22.68	27.28	31.67	36.63	41.58	46.7	51.77		0.17	1.10	1.57	1.92
		2800	11.21	12.78	14.59	18.41	20.90	23.33	28.03	32.50	37.52	42.49	47.57	52.49		0.18	1.15	1.63	1.99
		2900	11.52	13.13	15.00	18.92	21.47	23.96	28.75	33.29	38.36	43.34	48.35	53.09		0.18	1.19	1.68	2.06
		3000	11.82	13.48	15.40	19.42	22.02	24.56	29.45	34.05	39.16	44.12	49.04	53.56		0.19	1.23	1.74	2.14
		3100	12.12	13.82	15.79	19.90	22.56	25.15	30.12	34.78	39.91	44.84	49.64	53.89		0.20	1.27	1.80	2.21
		3200	12.41	14.15	16.17	20.37	23.08	25.72	30.77	35.47	40.60	45.49	50.14	54.09		0.20	1.31	1.86	2.28
		3300	12.69	14.48	16.53	20.83	23.59	26.28	31.39	36.12	41.25	46.06	50.54	54.16		0.21	1.35	1.92	2.35
		3400	12.96	14.79	16.89	21.27	24.08	26.81	31.98	36.73	41.85	46.57	50.85			0.22	1.39	1.97	2.42
	20	3500	13.23	15.10	17.24	21.70	24.56	27.32	32.54	37.31	42.39	47	51.04			0.22	1.43	2.03	2.49
		3600	13.49	15.40	17.58	22.11	25.01	27.81	33.07	37.85	42.87	47.35	51.13			0.23	1.47	2.09	2.56
		3700	13.74	15.68	17.91	22.51	25.45	28.28	33.57	38.34	43.30	47.62	51.11			0.23	1.51	2.15	2.63
		3800	13.99	15.96	18.22	22.90	25.87	28.72	34.04	38.79	43.66	47.81				0.24	1.55	2.21	2.71
		3900	14.22	16.23	18.53	23.26	26.27	29.15	34.48	39.20	43.97	47.92				0.25	1.60	2.26	2.78
		4000	14.45	16.49	18.82	23.62	26.65	29.55	34.89	39.57	44.22	47.95				0.25	1.64	2.32	2.85
		4100	14.67	16.74	19.10	23.96	27.01	29.92	35.26	39.88	44.40	47.88				0.26	1.68	2.38	2.92
		4200	14.88	16.98	19.37	24.28	27.36	30.28	35.60	40.16	44.52	47.73				0.27	1.72	2.44	2.99
	25	4300	15.08	17.21	19.63	24.58	27.68	30.60	35.90	40.38	44.57					0.27	1.76	2.50	3.06
		4400	15.27	17.43	19.88	24.87	27.98	30.91	36.17	40.56	44.56					0.28	1.80	2.56	3.13
		4500	15.45	17.64	20.11	25.14	28.26	31.18	36.40	40.69	44.47					0.28	1.84	2.61	3.20
		4600	15.62	17.83	20.33	25.39	28.52	31.44	36.60	40.77	44.32					0.29	1.88	2.67	3.28
		4700	15.79	18.02	20.54	25.62	28.75	31.66	36.75	40.79						0.30	1.92	2.73	3.35
		4800	15.94	18.19	20.73	25.84	28.96	31.86	36.87	40.76						0.30	1.96	2.79	3.42
		4900	16.08	18.36	20.91	26.03	29.15	32.02	36.95	40.68						0.31	2.00	2.85	3.49
		5000	16.22	18.51	21.08	26.21	29.32	32.16	36.99	40.55						0.32	2.05	2.90	3.56
	30	5100	16.34	18.65	21.23	26.37	29.46	32.28	36.99	40.36						0.32	2.09	2.96	3.63
		5200	16.45	18.77	21.37	26.50	29.58	32.36	36.94	40.11						0.33	2.13	3.02	3.70
		5300	16.56	18.89	21.49	26.62	29.67	32.41	36.86							0.34	2.17	3.08	3.77
		5400	16.65	18.99	21.60	26.72	29.74	32.43	36.73							0.34	2.21	3.14	3.84
		5500	16.73	19.08	21.69	26.79	29.78	32.42	36.55							0.35	2.25	3.19	3.92
		5600	16.80	19.15	21.77	26.84	29.80	32.38	36.33							0.35	2.29	3.25	3.99
		5700	16.85	19.22	21.83	26.88	29.79	32.30	36.07							0.36	2.33	3.31	4.06
		5800	16.90	19.27	21.88	26.89	29.75	32.20	35.76							0.37	2.37	3.37	4.13
		5900	16.93	19.30	21.91	26.87	29.68	32.06								0.37	2.41	3.43	4.20
	35	6000	16.96	19.32	21.92	26.84	29.59	31.88								0.38	2.45	3.48	4.27
													$v_{max} \leq 55$ m/s						
													v > 42 m/s. Please consult our Application Engineering Department.						
						40													v [m/s]
						Dynamically balanced (for details see DIN 2211)													Pulleys

Note: Pulley diameters shown are outside diameters for section 5VX.

optibelt SUPER X-POWER

POWER RATINGS

optibelt SUPER X-POWER M=S PROFILE XPC

NOMINAL POWER RATING P_N [kW]

FOR β = 180° AND L_d = 3550 mm

Table 60

Pulleys	v [m/s]	n_k [min⁻¹]	Datum diameter of small pulley d_{dk} [mm] 180	200	224	250	280	315	400	450	500	560	630	710	Additional power [kW] per belt for speed ratio i 1.01 to 1.05	1.06 to 1.26	1.27 to 1.57	> 1.57
Statically balanced		**700**	10.79	12.84	15.29	17.93	20.94	24.43	32.74	37.51	42.18	47.65	53.82	60.57	0.08	0.49	0.70	0.85
		950	14.40	17.14	20.39	23.88	27.86	32.42	43.16	49.20	55.01	61.66	68.91	76.46	0.10	0.67	0.95	1.16
		1450	21.27	25.27	29.98	34.98	40.60	46.91	61.06	68.47	75.11	81.94	88.17	92.72	0.16	1.02	1.44	1.77
		2850	37.09	43.48	50.58	57.52	64.43	70.83							0.31	2.00	2.84	3.48
		50	0.85	1.01	1.19	1.40	1.63	1.90	2.56	2.94	3.33	3.79	4.32	4.93	0.01	0.04	0.05	0.06
		100	1.66	1.97	2.34	2.74	3.20	3.74	5.03	5.79	6.55	7.45	8.51	9.71	0.01	0.07	0.10	0.12
		150	2.46	2.92	3.47	4.06	4.74	5.54	7.47	8.59	9.72	11.06	12.62	14.40	0.02	0.11	0.15	0.18
		200	3.24	3.85	4.58	5.37	6.27	7.33	9.87	11.37	12.85	14.63	16.69	19.03	0.02	0.14	0.20	0.24
		250	4.02	4.78	5.68	6.66	7.79	9.10	12.26	14.11	15.95	18.15	20.70	23.59	0.03	0.18	0.25	0.31
		300	4.79	5.70	6.78	7.95	9.29	10.86	14.63	16.83	19.02	21.63	24.66	28.08	0.03	0.21	0.30	0.37
		350	5.56	6.61	7.87	9.22	10.79	12.60	16.97	19.52	22.05	25.07	28.56	32.49	0.04	0.25	0.35	0.43
		400	6.32	7.52	8.95	10.49	12.27	14.33	19.29	22.18	25.05	28.46	32.39	36.82	0.04	0.28	0.40	0.49
		450	7.08	8.42	10.02	11.75	13.74	16.05	21.59	24.82	28.01	31.80	36.17	41.06	0.05	0.32	0.45	0.55
	5	500	7.83	9.31	11.09	13.00	15.20	17.75	23.87	27.42	30.94	35.09	39.86	45.20	0.05	0.35	0.50	0.61
		550	8.58	10.20	12.15	14.25	16.65	19.44	26.13	30.00	33.82	38.33	43.49	49.23	0.06	0.39	0.55	0.67
		600	9.32	11.09	13.20	15.48	18.09	21.12	28.36	32.54	36.65	41.50	47.02	53.14	0.07	0.42	0.60	0.73
		650	10.06	11.97	14.25	16.71	19.52	22.78	30.56	35.04	39.44	44.61	50.47	56.92	0.07	0.46	0.65	0.79
		700	10.79	12.84	15.29	17.93	20.94	24.43	32.74	37.51	42.18	47.65	53.82	60.57	0.08	0.49	0.70	0.85
		750	11.52	13.71	16.33	19.14	22.35	26.06	34.88	39.93	44.87	50.62	57.07	64.08	0.08	0.53	0.75	0.92
		800	12.25	14.58	17.35	20.34	23.75	27.68	37.00	42.32	47.49	53.51	60.21	67.43	0.09	0.56	0.80	0.98
		850	12.97	15.44	18.37	21.53	25.13	29.28	39.09	44.66	50.06	56.31	63.24	70.61	0.09	0.60	0.85	1.04
		900	13.69	16.29	19.39	22.71	26.50	30.86	41.14	46.95	52.57	59.03	66.14	73.63	0.10	0.63	0.90	1.10
		950	14.40	17.14	20.39	23.88	27.86	32.42	43.16	49.20	55.01	61.66	68.91	76.46	0.10	0.67	0.95	1.16
	10	1000	15.11	17.98	21.39	25.04	29.20	33.97	45.14	51.39	57.39	64.19	71.55	79.11	0.11	0.70	1.00	1.22
		1050	15.81	18.81	22.38	26.19	30.53	35.50	47.08	53.53	59.69	66.63	74.05	81.55	0.11	0.74	1.05	1.28
		1100	16.51	19.64	23.36	27.33	31.85	37.00	48.98	55.62	61.91	68.96	76.41	83.78	0.12	0.77	1.10	1.34
		1150	17.21	20.47	24.33	28.46	33.14	38.49	50.85	57.65	64.06	71.18	78.60	85.79	0.12	0.81	1.15	1.40
		1200	17.90	21.28	25.30	29.58	34.43	39.95	52.66	59.62	66.12	73.28	80.64	87.58	0.13	0.84	1.20	1.47
		1250	18.58	22.09	26.25	30.69	35.70	41.39	54.44	61.52	68.10	75.27	82.51	89.12	0.14	0.88	1.25	1.53
		1300	19.26	22.90	27.20	31.78	36.95	42.81	56.17	63.36	70.00	77.13	84.20	90.42	0.14	0.91	1.29	1.59
		1350	19.94	23.70	28.14	32.86	38.18	44.20	57.85	65.14	71.80	78.87	85.71	91.46	0.15	0.95	1.34	1.65
		1400	20.61	24.49	29.07	33.93	39.40	45.57	59.48	66.84	73.50	80.47	87.04	92.23	0.15	0.98	1.39	1.71
		1450	21.27	25.27	29.98	34.98	40.60	46.91	61.06	68.47	75.11	81.94	88.17	92.72	0.16	1.02	1.44	1.77
	15	1500	21.93	26.04	30.89	36.02	41.78	48.23	62.59	70.03	76.61	83.26	89.10		0.16	1.05	1.49	1.83
		1550	22.58	26.81	31.79	37.05	42.93	49.52	64.06	71.51	78.02	84.44	89.82		0.17	1.09	1.54	1.89
		1600	23.23	27.57	32.68	38.06	44.07	50.78	65.48	72.91	79.31	85.47	90.33		0.17	1.12	1.59	1.95
		1650	23.87	28.32	33.55	39.06	45.19	52.01	66.84	74.23	80.49	86.34	90.62		0.18	1.16	1.64	2.02
		1700	24.50	29.07	34.42	40.04	46.29	53.22	68.14	75.46	81.56	87.05			0.18	1.19	1.69	2.08
		1750	25.13	29.80	35.27	41.01	47.37	54.39	69.38	76.61	82.50	87.60			0.19	1.23	1.74	2.14
		1800	25.75	30.53	36.11	41.96	48.42	55.53	70.55	77.67	83.33	87.97			0.20	1.26	1.79	2.20
		1850	26.37	31.25	36.94	42.90	49.45	56.64	71.66	78.64	84.03	88.17			0.20	1.30	1.84	2.26
		1900	26.98	31.96	37.76	43.81	50.46	57.72	72.71	79.52	84.61				0.21	1.33	1.89	2.32
		1950	27.58	32.66	38.57	44.71	51.45	58.76	73.69	80.29	85.05				0.21	1.37	1.94	2.38
		2000	28.17	33.35	39.36	45.60	52.41	59.77	74.59	80.97	85.36				0.22	1.40	1.99	2.44
		2050	28.76	34.03	40.14	46.46	53.34	60.74	75.43	81.55	85.53				0.22	1.44	2.04	2.50
	20	2100	29.34	34.70	40.90	47.31	54.25	61.68	76.19	82.03	85.55				0.23	1.47	2.09	2.56
		2150	29.91	35.36	41.66	48.14	55.13	62.58	76.88	82.40					0.23	1.51	2.14	2.63
		2200	30.48	36.02	42.39	48.95	55.99	63.44	77.49	82.66					0.24	1.54	2.19	2.69
		2250	31.04	36.66	43.12	49.73	56.82	64.26	78.03	82.81					0.24	1.58	2.24	2.75
		2300	31.59	37.29	43.83	50.50	57.62	65.05	78.48	82.84					0.25	1.61	2.29	2.81
		2350	32.13	37.91	44.52	51.25	58.39	65.79	78.85						0.26	1.65	2.34	2.87
		2400	32.67	38.52	45.20	51.98	59.14	66.49	79.14						0.26	1.68	2.39	2.93
		2450	33.19	39.12	45.86	52.68	59.85	67.15	79.35						0.27	1.72	2.44	2.99
		2500	33.71	39.70	46.51	53.37	60.53	67.77	79.46						0.27	1.75	2.49	3.05
		2550	34.22	40.28	47.14	54.03	61.19	68.35	79.49						0.28	1.79	2.54	3.11
	25	2600	34.72	40.84	47.76	54.67	61.81	68.88	79.43						0.28	1.82	2.59	3.18
		2650	35.21	41.39	48.36	55.29	62.40	69.36							0.29	1.86	2.64	3.24
		2700	35.70	41.93	48.94	55.88	62.96	69.80							0.29	1.89	2.69	3.30
		2750	36.17	42.46	49.51	56.45	63.48	70.19							0.30	1.93	2.74	3.36
		2800	36.63	42.98	50.05	57.00	63.97	70.54							0.30	1.96	2.79	3.42
		2850	37.09	43.48	50.58	57.52	64.43	70.83							0.31	2.00	2.84	3.48
		2900	37.54	43.97	51.10	58.02	64.85	71.08							0.31	2.04	2.89	3.54
		2950	37.97	44.44	51.59	58.49	65.23	71.27							0.32	2.07	2.94	3.60
		3000	38.40	44.91	52.06	58.93	65.58	71.42							0.33	2.11	2.99	3.66
		3050	38.81	45.35	52.52	59.35	65.90	71.51							0.33	2.14	3.04	3.72
	30	3100	39.22	45.79	52.96	59.74	66.17	71.55							0.34	2.18	3.09	3.79
		3150	39.62	46.21	53.37	60.11	66.41	71.54							0.34	2.21	3.14	3.85
		3200	40.00	46.62	53.77	60.45	66.61	71.47							0.35	2.25	3.19	3.91
		3250	40.38	47.01	54.15	60.76	66.77	71.35							0.35	2.28	3.24	3.97
		3300	40.74	47.39	54.50	61.04	66.89	71.17							0.36	2.32	3.29	4.03
		3350	41.09	47.75	54.84	61.29	66.97								0.36	2.35	3.34	4.09
		3400	41.43	48.10	55.15	61.52	67.01								0.37	2.39	3.39	4.15
		3450	41.77	48.43	55.45	61.71	67.01								0.37	2.42	3.44	4.21
		3500	42.08	48.75	55.72	61.87	66.97								0.38	2.46	3.49	4.27
	35			40														
Dynamically balanced (for details see DIN 2211)															v [m/s]			
															Pulleys			

$v_{max} \leq 55$ m/s

v > 42 m/s.
Please consult our Application Engineering Department.

SUPERSEDED

POWER RATINGS

optibelt SUPER E-POWER M=S PROFILE XPZ, 3VX, 9JX

NOMINAL POWER RATING P_N [kW]

FOR β = 180° AND L_d = 1600 mm

Table 61

Pulleys	v [m/s]	n_k [min⁻¹]	Datum diameter of small pulley d_{dk} [mm] 56	60	63	71	80	85	90	95	100	112	125	140	160	180	200	Additional power [kW] per belt for speed ratio i 1.01 to 1.05	1.06 to 1.26	1.27 to 1.57	> 1.57
Statically balanced		**700**	0.86	1.01	1.10	1.37	1.67	1.84	2.16	2.33	2.71	2.90	3.13	3.60	4.21	4.82	5.44	0.01	0.06	0.08	0.10
		950	1.10	1.28	1.42	1.78	2.16	2.38	2.81	3.02	3.53	3.78	4.07	4.69	5.50	6.30	7.08	0.01	0.08	0.11	0.13
		1450	1.52	1.79	1.98	2.50	3.07	3.40	4.02	4.32	5.06	5.42	5.84	6.73	7.90	9.02	10.13	0.02	0.12	0.16	0.20
		2850	2.48	2.95	3.31	4.25	5.27	5.83	6.94	7.49	8.76	9.38	10.10	11.60	13.51	15.32	17.00	0.04	0.23	0.32	0.40
		100	0.17	0.19	0.22	0.26	0.31	0.34	0.40	0.42	0.49	0.52	0.55	0.64	0.74	0.85	0.96	0.00	0.01	0.01	0.01
		200	0.31	0.36	0.38	0.47	0.56	0.62	0.73	0.78	0.90	0.96	1.03	1.19	1.39	1.58	1.79	0.00	0.02	0.02	0.03
		300	0.43	0.50	0.55	0.67	0.80	0.89	1.04	1.12	1.30	1.38	1.49	1.70	1.99	2.28	2.57	0.00	0.02	0.03	0.04
		400	0.55	0.64	0.70	0.85	1.03	1.14	1.33	1.43	1.67	1.78	1.92	2.20	2.58	2.95	3.31	0.00	0.03	0.05	0.06
		500	0.66	0.77	0.84	1.03	1.26	1.38	1.62	1.74	2.03	2.17	2.33	2.68	3.14	3.59	4.04	0.01	0.04	0.06	0.07
		600	0.77	0.89	0.97	1.21	1.46	1.61	1.90	2.04	2.38	2.54	2.74	3.14	3.68	4.21	4.74	0.01	0.05	0.07	0.08
		700	0.86	1.01	1.10	1.37	1.67	1.84	2.16	2.33	2.71	2.90	3.13	3.60	4.21	4.82	5.44	0.01	0.06	0.08	0.10
		800	0.96	1.12	1.24	1.54	1.87	2.06	2.42	2.62	3.05	3.26	3.52	4.04	4.74	5.42	6.10	0.01	0.06	0.09	0.11
		900	1.06	1.22	1.36	1.69	2.06	2.28	2.69	2.89	3.37	3.61	3.89	4.48	5.24	6.01	6.76	0.01	0.07	0.10	0.13
		1000	1.15	1.33	1.48	1.85	2.26	2.48	2.94	3.16	3.70	3.95	4.26	4.91	5.75	6.58	7.40	0.01	0.08	0.11	0.14
		1100	1.24	1.44	1.60	1.99	2.45	2.69	3.18	3.43	4.01	4.28	4.62	5.32	6.24	7.14	8.03	0.01	0.09	0.12	0.15
		1200	1.32	1.54	1.70	2.15	2.63	2.89	3.43	3.68	4.31	4.62	4.98	5.74	6.72	7.69	8.65	0.01	0.10	0.14	0.17
		1300	1.40	1.64	1.82	2.29	2.81	3.10	3.66	3.95	4.61	4.94	5.33	6.13	7.20	8.23	9.25	0.02	0.10	0.15	0.18
		1400	1.49	1.74	1.93	2.44	2.99	3.29	3.90	4.20	4.91	5.27	5.68	6.54	7.66	8.76	9.84	0.02	0.11	0.16	0.19
		1500	1.56	1.84	2.04	2.57	3.16	3.49	4.13	4.45	5.21	5.58	6.01	6.92	8.12	9.29	10.43	0.02	0.12	0.17	0.21
		1600	1.64	1.93	2.14	2.70	3.34	3.67	4.36	4.69	5.50	5.89	6.35	7.31	8.57	9.79	10.99	0.02	0.13	0.18	0.22
	5	1700	1.72	2.02	2.24	2.84	3.50	3.86	4.58	4.93	5.78	6.19	6.67	7.69	9.01	10.30	11.54	0.02	0.14	0.19	0.24
		1800	1.79	2.11	2.34	2.98	3.67	4.04	4.80	5.17	6.06	6.49	7.00	8.06	9.44	10.79	12.08	0.02	0.14	0.20	0.25
		1900	1.86	2.20	2.45	3.11	3.83	4.24	5.02	5.41	6.34	6.79	7.32	8.42	9.86	11.27	12.62	0.02	0.15	0.22	0.26
		2000	1.93	2.28	2.54	3.23	4.00	4.40	5.23	5.64	6.61	7.08	7.63	8.78	10.28	11.74	13.14	0.02	0.16	0.23	0.28
		2100	2.00	2.36	2.64	3.36	4.15	4.58	5.45	5.87	6.88	7.37	7.94	9.14	10.69	12.19	13.64	0.03	0.17	0.24	0.29
		2200	2.06	2.45	2.74	3.48	4.31	4.76	5.65	6.10	7.14	7.66	8.24	9.49	11.10	12.65	14.14	0.03	0.18	0.25	0.31
		2300	2.14	2.53	2.83	3.60	4.46	4.93	5.86	6.31	7.40	7.93	8.54	9.83	11.50	13.09	14.62	0.03	0.18	0.26	0.32
		2400	2.20	2.62	2.92	3.72	4.61	5.10	6.06	6.54	7.66	8.21	8.84	10.16	11.88	13.51	15.08	0.03	0.19	0.27	0.33
		2500	2.27	2.69	3.01	3.84	4.76	5.27	6.26	6.76	7.91	8.47	9.13	10.50	12.26	13.93	15.53	0.03	0.20	0.28	0.35
		2600	2.33	2.77	3.10	3.96	4.91	5.44	6.46	6.96	8.16	8.75	9.42	10.82	12.62	14.34	15.97	0.03	0.21	0.30	0.36
		2700	2.39	2.84	3.18	4.07	5.05	5.59	6.65	7.18	8.40	9.00	9.70	11.15	13.00	14.75	16.39	0.03	0.22	0.31	0.38
		2800	2.45	2.92	3.26	4.19	5.20	5.76	6.84	7.38	8.64	9.26	9.97	11.46	13.34	15.13	16.81	0.03	0.22	0.32	0.39
		2900	2.51	2.99	3.35	4.30	5.34	5.92	7.03	7.58	8.88	9.52	10.25	11.76	13.69	15.50	17.21	0.04	0.23	0.33	0.40
		3000	2.57	3.06	3.43	4.40	5.48	6.07	7.22	7.79	9.12	9.77	10.51	12.06	14.03	15.86	17.58	0.04	0.24	0.34	0.42
		3100	2.63	3.13	3.52	4.51	5.62	6.22	7.40	7.98	9.35	10.01	10.78	12.35	14.35	16.22	17.95	0.04	0.25	0.35	0.43
		3200	2.68	3.20	3.60	4.62	5.76	6.37	7.58	8.17	9.56	10.25	11.03	12.64	14.68	16.56	18.30	0.04	0.26	0.36	0.45
		3300	2.74	3.28	3.67	4.73	5.89	6.52	7.76	8.36	9.79	10.49	11.28	12.92	14.99	16.90	18.64	0.04	0.26	0.37	0.46
	10	3400	2.78	3.35	3.76	4.84	6.02	6.67	7.93	8.56	10.01	10.72	11.52	13.20	15.29	17.21	18.95	0.04	0.27	0.39	0.47
		3500	2.84	3.41	3.83	4.93	6.16	6.82	8.11	8.74	10.22	10.94	11.77	13.46	15.58	17.51	19.25	0.04	0.28	0.40	0.49
		3600	2.89	3.48	3.90	5.04	6.28	6.96	8.28	8.93	10.44	11.17	12.00	13.73	15.86	17.80	19.54	0.04	0.29	0.41	0.50
		3700	2.94	3.54	3.98	5.14	6.41	7.09	8.45	9.11	10.64	11.39	12.24	13.98	16.13	18.08	19.80	0.05	0.30	0.42	0.52
		3800	3.00	3.60	4.06	5.23	6.53	7.24	8.60	9.28	10.85	11.60	12.46	14.22	16.39	18.35	20.05	0.05	0.30	0.43	0.53
		3900	3.05	3.66	4.13	5.33	6.65	7.37	8.77	9.46	11.04	11.81	12.68	14.46	16.64	18.60	20.28	0.05	0.31	0.44	0.54
		4000	3.10	3.72	4.19	5.42	6.77	7.50	8.93	9.62	11.23	12.01	12.90	14.70	16.90	18.83	20.50	0.05	0.32	0.45	0.56
		4100	3.13	3.78	4.26	5.52	6.89	7.63	9.08	9.79	11.42	12.22	13.10	14.93	17.12	19.06	20.69	0.05	0.33	0.47	0.57
		4200	3.18	3.84	4.33	5.60	7.01	7.76	9.24	9.95	11.60	12.41	13.31	15.14	17.35	19.26	20.87	0.05	0.34	0.48	0.58
		4300	3.23	3.90	4.39	5.70	7.12	7.88	9.38	10.12	11.80	12.60	13.51	15.35	17.56	19.46	21.02	0.05	0.34	0.49	0.60
		4400	3.28	3.96	4.46	5.78	7.24	8.02	9.53	10.27	11.96	12.78	13.70	15.55	17.76	19.64	21.16	0.05	0.35	0.50	0.61
		4500	3.31	4.01	4.52	5.87	7.34	8.14	9.67	10.42	12.14	12.96	13.90	15.76	17.95	19.80	21.28	0.06	0.36	0.51	0.63
		4600	3.36	4.07	4.58	5.96	7.45	8.26	9.82	10.57	12.31	13.14	14.08	15.94	18.13	19.96	21.37	0.06	0.37	0.52	0.64
		4700	3.40	4.12	4.64	6.04	7.56	8.38	9.96	10.72	12.48	13.31	14.24	16.12	18.30	20.09	21.44	0.06	0.38	0.53	0.65
		4800	3.43	4.16	4.72	6.12	7.66	8.48	10.09	10.86	12.64	13.48	14.42	16.30	18.46	20.21	21.50	0.06	0.38	0.54	0.67
		4900	3.48	4.22	4.76	6.20	7.76	8.60	10.22	11.00	12.79	13.63	14.58	16.45	18.60	20.30	21.53	0.06	0.39	0.56	0.68
		5000	3.52	4.27	4.82	6.29	7.86	8.71	10.36	11.14	12.94	13.79	14.74	16.61	18.73	20.40	21.54	0.06	0.40	0.57	0.70
	15	5100	3.55	4.32	4.88	6.36	7.96	8.82	10.48	11.27	13.08	13.94	14.89	16.76	18.86	20.46	21.53	0.06	0.41	0.58	0.71
		5200	3.59	4.37	4.94	6.43	8.05	8.93	10.60	11.40	13.22	14.09	15.04	16.90	18.97	20.52	21.49	0.06	0.42	0.59	0.72
		5300	3.62	4.42	4.99	6.52	8.15	9.04	10.72	11.53	13.37	14.22	15.18	17.03	19.07	20.56		0.07	0.42	0.60	0.74
		5400	3.66	4.45	5.05	6.59	8.24	9.13	10.84	11.65	13.50	14.35	15.31	17.16	19.15	20.57		0.07	0.43	0.61	0.75
		5500	3.68	4.50	5.10	6.66	8.33	9.23	10.94	11.77	13.62	14.48	15.44	17.27	19.22	20.57		0.07	0.44	0.62	0.77
		5600	3.72	4.55	5.15	6.72	8.42	9.32	11.06	11.88	13.74	14.60	15.56	17.38	19.28	20.56		0.07	0.45	0.64	0.78
		5800	3.78	4.63	5.24	6.86	8.59	9.52	11.27	12.11	13.97	14.83	15.78	17.56	19.37	20.47		0.07	0.46	0.66	0.81
		6000	3.84	4.70	5.34	6.98	8.75	9.68	11.47	12.31	14.18	15.04	15.97	17.70	19.39			0.07	0.48	0.68	0.84
		6200	3.89	4.78	5.42	7.10	8.90	9.85	11.65	12.50	14.38	15.23	16.14	17.81	19.36			0.08	0.50	0.70	0.86
		6400	3.95	4.85	5.51	7.22	9.05	10.01	11.82	12.67	14.54	15.38	16.27	17.88	19.27			0.08	0.51	0.73	0.89
		6600	4.00	4.91	5.59	7.33	9.18	10.15	11.98	12.83	14.69	15.52	16.38	17.90				0.08	0.53	0.75	0.92
	20	6800	4.03	4.97	5.66	7.44	9.31	10.28	12.12	12.97	14.81	15.61	16.46	17.89				0.08	0.54	0.77	0.95
		7000	4.07	5.03	5.72	7.52	9.42	10.42	12.25	13.09	14.92	15.70	16.51	17.84	$v_{max} \leq 55$ m/s			0.09	0.56	0.79	0.97
		7200	4.10	5.08	5.80	7.62	9.53	10.52	12.36	13.20	14.99	15.76	16.52	17.75				0.09	0.58	0.82	1.00
		7400	4.14	5.12	5.84	7.69	9.62	10.63	12.47	13.30	15.05	15.78	16.51	17.60				0.09	0.59	0.84	1.03
		7600	4.16	5.17	5.90	7.78	9.72	10.72	12.55	13.37	15.07	15.78	16.46					0.09	0.61	0.86	1.06
		7800	4.19	5.21	5.95	7.84	9.79	10.80	12.61	13.43	15.08	15.74	16.38		v > 42 m/s.			0.10	0.62	0.89	1.09
		8000	4.20	5.23	5.99	7.90	9.86	10.86	12.67	13.46	15.06	15.70	16.27		Please consult our			0.10	0.64	0.91	1.11
		8200	4.21	5.27	6.02	7.94	9.91	10.92	12.71	13.48	15.02	15.60	16.12		Application Engineering			0.10	0.66	0.93	1.14
		8400	4.22	5.28	6.05	7.99	9.96	10.96	12.72	13.48	14.95	15.48	15.94		Department.			0.10	0.67	0.95	1.17
			25		30	35			40									v [m/s]			
							Dynamically balanced (for details see DIN 2211)											Pulleys			

Note: Pulley diameters shown are outside diameters for section 3VX.

optibelt SUPER E-POWER

POWER RATINGS

optibelt SUPER E-POWER M=S PROFILE XPA

NOMINAL POWER RATING P_N [kW]

FOR β = 180° AND L_d = 2500 mm

Table 62

Pulleys	v [m/s]	n_k [min⁻¹]	Datum diameter of small pulley d_{dk} [mm] 71	80	85	95	100	112	118	125	140	160	180	200	224	250	280	Additional power [kW] per belt for speed ratio i 1.01 to 1.05	1.06 to 1.26	1.27 to 1.57	> 1.57
Statically balanced		**700**	1.34	1.86	2.14	2.70	2.98	3.65	3.97	4.36	5.18	6.26	7.33	8.40	9.66	11.02	12.55	0.02	0.13	0.19	0.23
		950	1.72	2.40	2.77	3.53	3.89	4.78	5.22	5.72	6.82	8.24	9.66	11.06	12.72	14.50	16.51	0.03	0.18	0.26	0.31
		1450	2.41	3.41	3.97	5.06	5.62	6.92	7.57	8.32	9.91	12.00	14.05	16.07	18.44	20.95	23.77	0.04	0.27	0.39	0.48
		2850	3.97	5.82	6.84	8.84	9.84	12.18	13.33	14.65	17.42	20.99	24.37	27.58	31.15	34.66	38.21	0.08	0.54	0.77	0.94
		100	0.26	0.34	0.38	0.48	0.52	0.62	0.68	0.74	0.88	1.04	1.22	1.39	1.60	1.82	2.08	0.00	0.02	0.03	0.03
		200	0.47	0.62	0.72	0.89	0.97	1.18	1.28	1.40	1.66	1.99	2.33	2.65	3.05	3.47	3.96	0.01	0.04	0.05	0.07
		300	0.66	0.90	1.02	1.27	1.40	1.70	1.85	2.03	2.40	2.89	3.37	3.86	4.44	5.05	5.77	0.01	0.06	0.08	0.10
		400	0.84	1.15	1.32	1.64	1.81	2.21	2.40	2.63	3.12	3.76	4.40	5.03	5.78	6.60	7.52	0.01	0.08	0.11	0.13
		500	1.02	1.39	1.60	2.00	2.21	2.70	2.94	3.22	3.82	4.61	5.40	6.18	7.10	8.10	9.24	0.01	0.09	0.13	0.16
		600	1.19	1.63	1.87	2.35	2.59	3.18	3.46	3.79	4.50	5.45	6.37	7.30	8.39	9.56	10.91	0.02	0.11	0.16	0.20
		700	1.34	1.86	2.14	2.70	2.98	3.65	3.97	4.36	5.18	6.26	7.33	8.40	9.66	11.02	12.55	0.02	0.13	0.19	0.23
		800	1.50	2.08	2.40	3.04	3.35	4.10	4.48	4.91	5.84	7.07	8.28	9.48	10.90	12.42	14.16	0.02	0.15	0.22	0.26
		900	1.64	2.29	2.65	3.36	3.71	4.56	4.97	5.46	6.49	7.86	9.20	10.54	12.12	13.81	15.73	0.03	0.17	0.24	0.30
		1000	1.80	2.51	2.90	3.68	4.07	5.00	5.46	6.00	7.13	8.64	10.12	11.58	13.32	15.17	17.27	0.03	0.19	0.27	0.33
		1100	1.93	2.71	3.14	4.00	4.43	5.44	5.94	6.53	7.76	9.40	11.02	12.61	14.50	16.50	18.78	0.03	0.21	0.30	0.36
		1200	2.08	2.92	3.38	4.31	4.78	5.87	6.41	7.04	8.39	10.15	11.90	13.62	15.65	17.81	20.24	0.04	0.23	0.32	0.40
		1300	2.21	3.12	3.62	4.62	5.11	6.29	6.88	7.56	9.00	10.91	12.77	14.62	16.79	19.09	21.68	0.04	0.25	0.35	0.43
	5	1400	2.34	3.31	3.85	4.92	5.45	6.71	7.34	8.06	9.61	11.64	13.63	15.59	17.90	20.34	23.08	0.04	0.27	0.38	0.46
		1500	2.47	3.50	4.08	5.22	5.78	7.13	7.79	8.57	10.20	12.36	14.47	16.55	18.98	21.56	24.44	0.04	0.28	0.40	0.49
		1600	2.59	3.70	4.31	5.51	6.11	7.54	8.24	9.06	10.80	13.07	15.30	17.50	20.05	22.75	25.76	0.05	0.30	0.43	0.53
		1700	2.72	3.89	4.52	5.80	6.43	7.93	8.68	9.54	11.38	13.78	16.12	18.41	21.10	23.92	27.04	0.05	0.32	0.46	0.56
		1800	2.84	4.07	4.74	6.08	6.76	8.33	9.12	10.02	11.95	14.46	16.92	19.32	22.12	25.04	28.27	0.05	0.34	0.48	0.59
		1900	2.96	4.25	4.96	6.37	7.07	8.72	9.55	10.50	12.52	15.14	17.70	20.21	23.11	26.14	29.46	0.06	0.36	0.51	0.63
		2000	3.07	4.43	5.17	6.65	7.38	9.11	9.97	10.97	13.07	15.80	18.48	21.07	24.07	27.19	30.60	0.06	0.38	0.54	0.66
		2100	3.19	4.60	5.38	6.92	7.68	9.49	10.39	11.42	13.61	16.46	19.24	21.91	25.02	28.22	31.70	0.06	0.40	0.56	0.69
		2200	3.30	4.78	5.58	7.19	7.98	9.86	10.80	11.88	14.15	17.11	19.97	22.74	25.93	29.21	32.75	0.06	0.42	0.59	0.73
		2300	3.41	4.94	5.78	7.45	8.28	10.24	11.21	12.32	14.68	17.74	20.70	23.54	26.82	30.16	33.74	0.07	0.44	0.62	0.76
		2400	3.52	5.11	5.99	7.72	8.57	10.61	11.60	12.77	15.20	18.36	21.41	24.34	27.67	31.07	34.68	0.07	0.45	0.65	0.79
		2500	3.62	5.27	6.18	7.97	8.86	10.97	12.00	13.20	15.71	18.97	22.09	25.09	28.50	31.94	35.57	0.07	0.47	0.67	0.82
		2600	3.72	5.44	6.37	8.23	9.14	11.32	12.38	13.62	16.21	19.56	22.76	25.84	29.29	32.77	36.40	0.08	0.49	0.70	0.86
		2700	3.83	5.59	6.56	8.48	9.42	11.66	12.77	14.04	16.70	20.15	23.42	26.54	30.06	33.56	37.16	0.08	0.51	0.73	0.89
		2800	3.92	5.75	6.74	8.72	9.70	12.01	13.14	14.45	17.20	20.71	24.06	27.24	30.79	34.31	37.87	0.08	0.53	0.75	0.92
	10	2900	4.02	5.90	6.94	8.96	9.97	12.35	13.51	14.86	17.66	21.26	24.68	27.90	31.49	35.00	38.52	0.08	0.55	0.78	0.96
		3000	4.12	6.05	7.12	9.20	10.24	12.67	13.87	15.25	18.13	21.80	25.28	28.55	32.16	35.65	39.11	0.09	0.57	0.81	0.99
		3100	4.20	6.19	7.28	9.44	10.50	13.01	14.23	15.64	18.59	22.33	25.86	29.16	32.78	36.25	39.62	0.09	0.59	0.83	1.02
		3200	4.30	6.34	7.46	9.67	10.76	13.32	14.58	16.02	19.03	22.85	26.42	29.76	33.38	36.82	40.07	0.09	0.61	0.86	1.05
		3300	4.38	6.48	7.63	9.90	11.02	13.63	14.92	16.39	19.46	23.34	26.96	30.31	33.94	37.32	40.45	0.10	0.63	0.89	1.09
		3400	4.46	6.62	7.80	10.12	11.26	13.94	15.25	16.76	19.88	23.82	27.49	30.85	34.45	37.76	40.75	0.10	0.64	0.91	1.12
		3500	4.55	6.76	7.97	10.34	11.51	14.24	15.59	17.11	20.29	24.29	27.98	31.36	34.93	38.16	40.99	0.10	0.66	0.94	1.15
		3600	4.63	6.89	8.12	10.55	11.75	14.54	15.91	17.47	20.70	24.74	28.46	31.84	35.36	38.51	41.15	0.11	0.68	0.97	1.19
		3700	4.70	7.02	8.28	10.76	11.98	14.83	16.22	17.81	21.08	25.18	28.92	32.28	35.77	38.80	41.22	0.11	0.70	0.99	1.22
		3800	4.79	7.15	8.44	10.97	12.20	15.12	16.52	18.14	21.47	25.60	29.35	32.70	36.12	39.02		0.11	0.72	1.02	1.25
		3900	4.86	7.27	8.59	11.17	12.43	15.40	16.82	18.47	21.83	26.00	29.77	33.10	36.43	39.19		0.11	0.74	1.05	1.29
	15	4000	4.93	7.39	8.74	11.36	12.66	15.66	17.12	18.78	22.19	26.39	30.16	33.44	36.71	39.30		0.12	0.76	1.08	1.32
		4100	5.00	7.51	8.88	11.56	12.88	15.92	17.40	19.09	22.54	26.76	30.52	33.77	36.92	39.35		0.12	0.78	1.10	1.35
		4200	5.06	7.63	9.02	11.75	13.08	16.18	17.68	19.38	22.86	27.11	30.85	34.06	37.10	39.34		0.12	0.80	1.13	1.38
		4300	5.14	7.74	9.16	11.93	13.28	16.43	17.95	19.67	23.18	27.44	31.16	34.31	37.24			0.13	0.81	1.16	1.42
		4400	5.20	7.85	9.30	12.11	13.49	16.68	18.22	19.96	23.48	27.76	31.45	34.54	37.32			0.13	0.83	1.18	1.45
		4500	5.26	7.96	9.43	12.29	13.68	16.91	18.47	20.22	23.78	28.06	31.72	34.72	37.36			0.13	0.85	1.21	1.48
		4600	5.32	8.06	9.55	12.46	13.87	17.14	18.71	20.48	24.06	28.33	31.96	34.87	37.34			0.13	0.87	1.24	1.52
		4700	5.38	8.16	9.67	12.62	14.05	17.36	18.95	20.74	24.32	28.58	32.16	34.98				0.14	0.89	1.26	1.55
		4800	5.42	8.26	9.80	12.78	14.23	17.58	19.18	20.98	24.59	28.82	32.34	35.06				0.14	0.91	1.29	1.58
		4900	5.47	8.35	9.91	12.94	14.41	17.78	19.39	21.20	24.83	29.04	32.50	35.10				0.14	0.93	1.32	1.62
		5000	5.52	8.45	10.03	13.09	14.57	17.99	19.61	21.42	25.04	29.23	32.62	35.10				0.15	0.95	1.34	1.65
		5100	5.57	8.53	10.14	13.24	14.74	18.17	19.81	21.64	25.26	29.41	32.71	35.05				0.15	0.97	1.37	1.68
		5200	5.62	8.62	10.25	13.38	14.89	18.36	20.00	21.84	25.45	29.57	32.77	34.98				0.15	0.98	1.40	1.71
		5300	5.66	8.70	10.34	13.51	15.05	18.53	20.18	22.02	25.64	29.70	32.81					0.16	1.00	1.42	1.75
	20	5400	5.70	8.78	10.44	13.64	15.19	18.70	20.36	22.20	25.81	29.82	32.82					0.16	1.02	1.45	1.78
		5500	5.74	8.86	10.54	13.78	15.32	18.86	20.52	22.37	25.96	29.90	32.78					0.16	1.04	1.48	1.81
		5600	5.77	8.93	10.63	13.90	15.46	19.01	20.68	22.52	26.10	29.98	32.72					0.16	1.06	1.51	1.85
		5700	5.81	9.00	10.72	14.00	15.59	19.15	20.82	22.67	26.22	30.02	32.64					0.17	1.08	1.53	1.88
		5800	5.83	9.06	10.80	14.12	15.71	19.30	20.96	22.80	26.33	30.04	32.52					0.17	1.10	1.56	1.91
		5900	5.86	9.12	10.87	14.22	15.82	19.42	21.08	22.92	26.41	30.04						0.17	1.12	1.59	1.94
		6000	5.88	9.18	10.94	14.32	15.92	19.54	21.20	23.03	26.48	30.01						0.18	1.14	1.61	1.98
		6100	5.90	9.24	11.02	14.41	16.03	19.64	21.31	23.12	26.54	29.96						0.18	1.16	1.64	2.01
		6200	5.93	9.29	11.09	14.51	16.12	19.74	21.41	23.22	26.58	29.88						0.18	1.17	1.67	2.04
		6300	5.94	9.34	11.15	14.58	16.21	19.84	21.49	23.29	26.60	29.78						0.18	1.19	1.69	2.08
		6400	5.95	9.38	11.21	14.66	16.30	19.92	21.56	23.35	26.60	29.66			$v_{max} \leq 55$ m/s			0.19	1.21	1.72	2.11
		6500	5.96	9.42	11.26	14.74	16.37	19.99	21.62	23.40	26.59	29.51						0.19	1.23	1.75	2.14
		6600	5.98	9.46	11.30	14.80	16.43	20.05	21.68	23.44	26.57							0.19	1.25	1.77	2.18
	25	6700	5.98	9.49	11.35	14.86	16.49	20.10	21.72	23.45	26.52				v > 42 m/s.			0.20	1.27	1.80	2.21
		6800	5.99	9.52	11.39	14.90	16.55	20.15	21.76	23.46	26.45				Please consult our			0.20	1.29	1.83	2.24
		6900	5.99	9.54	11.42	14.95	16.60	20.18	21.78	23.46	26.36				Application Engineering			0.20	1.31	1.86	2.27
		7000	5.99	9.56	11.46	14.99	16.63	20.21	21.78	23.44	26.27				Department.			0.21	1.33	1.88	2.31
						30	35	40													v [m/s]
						Dynamically balanced (for details see DIN 2211)															Pulleys

optibelt SUPER E-POWER

POWER RATINGS

optibelt SUPER E-POWER M=S PROFILE XPB, 5VX, 15JX

NOMINAL POWER RATING P_N [kW]

FOR β = 180° AND L_d = 3550 mm

Table 63

Pulleys	v [m/s]	n_k [min⁻¹]	Datum diameter of small pulley d_{dk} [mm] 112	118	125	140	150	160	180	200	224	250	280	315	400	Additional power [kW] per belt for speed ratio i 1.01 to 1.05	1.06 to 1.26	1.27 to 1.57	> 1.57
Statically balanced		**700**	3.98	4.51	5.12	6.43	7.31	8.17	9.91	11.63	13.68	15.89	18.41	21.32	28.27	0.04	0.29	0.41	0.50
		950	5.26	5.96	6.79	8.54	9.71	10.87	13.18	15.47	18.19	21.11	24.43	28.25	37.22	0.06	0.39	0.55	0.68
		1450	7.69	8.75	9.97	12.59	14.30	16.02	19.42	22.75	26.70	30.88	35.58	40.88	52.82	0.09	0.59	0.84	1.03
		2850	13.63	15.55	17.76	22.40	25.42	28.37	34.08	39.48	45.53	51.50	57.56	63.36		0.18	1.17	1.65	2.03
		100	0.66	0.73	0.83	1.03	1.16	1.30	1.56	1.82	2.14	2.48	2.87	3.32	4.43	0.01	0.04	0.06	0.07
		200	1.25	1.40	1.60	1.98	2.24	2.51	3.02	3.54	4.15	4.82	5.58	6.48	8.63	0.01	0.08	0.12	0.14
		300	1.82	2.05	2.33	2.90	3.29	3.67	4.44	5.21	6.12	7.10	8.23	9.55	12.72	0.02	0.12	0.17	0.21
		400	2.38	2.69	3.05	3.80	4.32	4.82	5.84	6.85	8.05	9.35	10.84	12.58	16.73	0.03	0.16	0.23	0.28
		500	2.92	3.30	3.74	4.70	5.33	5.96	7.21	8.46	9.95	11.56	13.40	15.54	20.66	0.03	0.20	0.29	0.36
		600	3.46	3.91	4.44	5.57	6.32	7.08	8.57	10.06	11.83	13.74	15.92	18.46	24.50	0.04	0.25	0.35	0.43
		700	3.98	4.51	5.12	6.43	7.31	8.17	9.91	11.63	13.68	15.89	18.41	21.32	28.27	0.04	0.29	0.41	0.50
		800	4.50	5.10	5.80	7.28	8.28	9.26	11.23	13.18	15.50	18.00	20.84	24.13	31.93	0.05	0.33	0.46	0.57
	5	900	5.00	5.68	6.47	8.14	9.24	10.34	12.53	14.71	17.30	20.08	23.24	26.89	35.48	0.06	0.37	0.52	0.64
		1000	5.51	6.25	7.12	8.96	10.19	11.40	13.82	16.22	19.07	22.13	25.61	29.59	38.94	0.06	0.41	0.58	0.71
		1100	6.01	6.83	7.76	9.78	11.12	12.46	15.10	17.71	20.82	24.14	27.91	32.22	42.26	0.07	0.45	0.64	0.78
		1200	6.50	7.38	8.41	10.60	12.05	13.49	16.34	19.18	22.54	26.11	30.17	34.79	45.46	0.08	0.49	0.70	0.85
		1300	6.98	7.93	9.05	11.40	12.96	14.51	17.59	20.63	24.23	28.06	32.38	37.28	48.52	0.08	0.53	0.75	0.93
		1400	7.46	8.48	9.67	12.19	13.86	15.52	18.80	22.06	25.88	29.95	34.52	39.71	51.43	0.09	0.57	0.81	1.00
		1500	7.93	9.02	10.28	12.97	14.75	16.51	20.00	23.45	27.50	31.80	36.62	42.04	54.18	0.09	0.61	0.87	1.07
		1600	8.40	9.55	10.90	13.74	15.62	17.50	21.19	24.83	29.10	33.61	38.65	44.29	56.77	0.10	0.65	0.93	1.14
		1700	8.86	10.08	11.50	14.51	16.49	18.47	22.36	26.17	30.65	35.36	40.62	46.46	59.18	0.11	0.70	0.99	1.21
	10	1800	9.31	10.60	12.08	15.25	17.34	19.42	23.50	27.49	32.17	37.08	42.52	48.53	61.40	0.11	0.74	1.05	1.28
		1900	9.76	11.10	12.67	16.00	18.18	20.35	24.62	28.79	33.66	38.74	44.35	50.50	63.42	0.12	0.78	1.10	1.35
		2000	10.19	11.60	13.25	16.73	19.01	21.28	25.72	30.06	35.10	40.34	46.10	52.37	65.24	0.13	0.82	1.16	1.42
		2100	10.62	12.10	13.81	17.44	19.82	22.18	26.80	31.30	36.50	41.90	47.78	54.12	66.84	0.13	0.86	1.22	1.50
		2200	11.05	12.59	14.38	18.14	20.62	23.06	27.85	32.50	37.86	43.39	49.38	55.76	68.21	0.14	0.90	1.28	1.57
		2300	11.47	13.07	14.92	18.83	21.40	23.93	28.88	33.67	39.18	44.82	50.89	57.30	69.35	0.15	0.94	1.34	1.64
		2400	11.88	13.54	15.46	19.51	22.16	24.78	29.88	34.80	40.44	46.19	52.32	58.70	70.24	0.15	0.98	1.39	1.71
	15	2500	12.28	14.00	15.98	20.18	22.92	25.62	30.86	35.90	41.66	47.50	53.65	59.98	70.86	0.16	1.02	1.45	1.78
		2600	12.67	14.45	16.51	20.83	23.65	26.42	31.81	36.97	42.84	48.73	54.89	61.12	71.22	0.16	1.06	1.51	1.85
		2700	13.07	14.90	17.02	21.47	24.37	27.22	32.74	38.00	43.96	49.90	56.04	62.12		0.17	1.10	1.57	1.92
		2800	13.45	15.34	17.51	22.09	25.08	28.00	33.64	39.00	45.02	50.99	57.08	62.99		0.18	1.15	1.63	1.99
		2900	13.82	15.76	18.00	22.70	25.76	28.75	34.50	39.95	46.03	52.01	58.02	63.71		0.18	1.19	1.68	2.06
		3000	14.18	16.18	18.48	23.30	26.42	29.47	35.34	40.86	46.99	52.94	58.85	64.27		0.19	1.23	1.74	2.14
		3100	14.54	16.58	18.95	23.88	27.07	30.18	36.14	41.74	47.89	53.81	59.57	64.67		0.20	1.27	1.80	2.21
		3200	14.89	16.98	19.40	24.44	27.70	30.86	36.92	42.56	48.72	54.59	60.17	64.91		0.20	1.31	1.86	2.28
		3300	15.23	17.38	19.84	25.00	28.31	31.54	37.67	43.34	49.50	55.27	60.65	64.99		0.21	1.35	1.92	2.35
	20	3400	15.55	17.75	20.27	25.52	28.90	32.17	38.38	44.08	50.22	55.88	61.02			0.22	1.39	1.97	2.42
		3500	15.88	18.12	20.69	26.04	29.47	32.78	39.05	44.77	50.87	56.40	61.25			0.22	1.43	2.03	2.49
		3600	16.19	18.48	21.10	26.53	30.01	33.37	39.68	45.42	51.44	56.82	61.36			0.23	1.47	2.09	2.56
		3700	16.49	18.82	21.49	27.01	30.54	33.94	40.28	46.01	51.96	57.14	61.33			0.23	1.51	2.15	2.63
		3800	16.79	19.15	21.86	27.48	31.04	34.46	40.85	46.55	52.39	57.37				0.24	1.55	2.21	2.71
		3900	17.06	19.48	22.24	27.91	31.52	34.98	41.38	47.04	52.76	57.50				0.25	1.60	2.26	2.78
		4000	17.34	19.79	22.58	28.34	31.98	35.46	41.87	47.48	53.06	57.54				0.25	1.64	2.32	2.85
		4100	17.60	20.09	22.92	28.75	32.41	35.90	42.31	47.86	53.28	57.46				0.26	1.68	2.38	2.92
	25	4200	17.86	20.38	23.24	29.14	32.83	36.34	42.72	48.19	53.42	57.28				0.27	1.72	2.44	2.99
		4300	18.10	20.65	23.56	29.50	33.22	36.72	43.08	48.46	53.48					0.27	1.76	2.50	3.06
		4400	18.32	20.92	23.86	29.84	33.58	37.09	43.40	48.67	53.47					0.28	1.80	2.56	3.13
		4500	18.54	21.17	24.13	30.17	33.91	37.42	43.68	48.83	53.36					0.28	1.84	2.61	3.20
		4600	18.74	21.40	24.40	30.47	34.22	37.73	43.92	48.92	53.18					0.29	1.88	2.67	3.28
		4700	18.95	21.62	24.65	30.74	34.50	37.99	44.10	48.95						0.30	1.92	2.73	3.35
		4800	19.13	21.83	24.88	31.01	34.75	38.23	44.24	48.91						0.30	1.96	2.79	3.42
		4900	19.30	22.03	25.09	31.24	34.98	38.42	44.34	48.82						0.31	2.00	2.85	3.49
		5000	19.46	22.21	25.30	31.45	35.18	38.59	44.39	48.66						0.32	2.05	2.90	3.56
	30	5100	19.61	22.38	25.48	31.64	35.35	38.74	44.39	48.43						0.32	2.09	2.96	3.63
		5200	19.74	22.52	25.64	31.80	35.50	38.83	44.33	48.13						0.33	2.13	3.02	3.70
		5300	19.87	22.67	25.79	31.94	35.60	38.89	44.23							0.34	2.17	3.08	3.77
		5400	19.98	22.79	25.92	32.06	35.69	38.92	44.08							0.34	2.21	3.14	3.84
		5500	20.08	22.90	26.03	32.15	35.74	38.90	43.86							0.35	2.25	3.19	3.92
		5600	20.16	22.98	26.12	32.21	35.76	38.86	43.60							0.35	2.29	3.25	3.99
		5700	20.22	23.06	26.20	32.26	35.75	38.76	43.28							0.36	2.33	3.31	4.06
		5800	20.28	23.12	26.26	32.27	35.70	38.64	42.91							0.37	2.37	3.37	4.13
	35	5900	20.32	23.16	26.29	32.24	35.62	38.47								0.37	2.41	3.43	4.20
		6000	20.35	23.18	26.30	32.21	35.51	38.26								0.38	2.45	3.48	4.27
													$v_{max} \leq 55$ m/s						
													v > 42 m/s. Please consult our Application Engineering Department.						
						40													v [m/s]
						Dynamically balanced (for details see DIN 2211)													Pulleys

Note: Pulley diameters shown are outside diameters for section 5VX.

optibelt SUPER E-POWER

POWER RATINGS

optibelt SUPER E-POWER M=S PROFILE XPC

NOMINAL POWER RATING P_N [kW]

FOR β = 180° AND L_d = 3550 mm

Table 64

Pulleys	v [m/s]	n_k [min⁻¹]	Datum diameter of small pulley d_{dk} [mm] 180	200	224	250	280	315	400	450	500	560	630	710	Additional power [kW] per belt for speed ratio i 1.01 to 1.05	1.06 to 1.26	1.27 to 1.57	> 1.57
Statically balanced		**700**	12.95	15.41	18.35	21.52	25.13	29.32	39.29	45.01	50.62	57.18	64.58	72.68	0.08	0.49	0.70	0.85
		950	17.28	20.57	24.47	28.66	33.43	38.90	51.79	59.04	66.01	73.99	82.69	91.75	0.10	0.67	0.95	1.16
		1450	25.52	30.32	35.98	41.98	48.72	56.29	73.27	82.16	90.13	98.33	105.80	111.26	0.16	1.02	1.44	1.77
		2850	44.51	52.18	60.70	69.02	77.32	85.00							0.31	2.00	2.84	3.48
		50	1.02	1.21	1.43	1.68	1.96	2.28	3.07	3.53	4.00	4.55	5.18	5.92	0.01	0.04	0.05	0.06
		100	1.99	2.36	2.81	3.29	3.84	4.49	6.04	6.95	7.86	8.94	10.21	11.65	0.01	0.07	0.10	0.12
		150	2.95	3.50	4.16	4.87	5.69	6.65	8.96	10.31	11.66	13.27	15.14	17.28	0.02	0.11	0.15	0.18
		200	3.89	4.62	5.50	6.44	7.52	8.80	11.84	13.64	15.42	17.56	20.03	22.84	0.02	0.14	0.20	0.24
		250	4.82	5.74	6.82	7.99	9.35	10.92	14.71	16.93	19.14	21.78	24.84	28.31	0.03	0.18	0.25	0.31
		300	5.75	6.84	8.14	9.54	11.15	13.03	17.56	20.20	22.82	25.96	29.59	33.70	0.03	0.21	0.30	0.37
		350	6.67	7.93	9.44	11.06	12.95	15.12	20.36	23.42	26.46	30.08	34.27	38.99	0.04	0.25	0.35	0.43
		400	7.58	9.02	10.74	12.59	14.72	17.20	23.15	26.62	30.06	34.15	38.87	44.18	0.04	0.28	0.40	0.49
		450	8.50	10.10	12.02	14.10	16.49	19.26	25.91	29.78	33.61	38.16	43.40	49.27	0.05	0.32	0.45	0.55
	5	500	9.40	11.17	13.31	15.60	18.24	21.30	28.64	32.90	37.13	42.11	47.83	54.24	0.05	0.35	0.50	0.61
		550	10.30	12.24	14.58	17.10	19.98	23.33	31.36	36.00	40.58	46.00	52.19	59.08	0.06	0.39	0.55	0.67
		600	11.18	13.31	15.84	18.58	21.71	25.34	34.03	39.05	43.98	49.80	56.42	63.77	0.07	0.42	0.60	0.73
		650	12.07	14.36	17.10	20.05	23.42	27.34	36.67	42.05	47.33	53.53	60.56	68.30	0.07	0.46	0.65	0.79
		700	12.95	15.41	18.35	21.52	25.13	29.32	39.29	45.01	50.62	57.18	64.58	72.68	0.08	0.49	0.70	0.85
		750	13.82	16.45	19.60	22.97	26.82	31.27	41.86	47.92	53.84	60.74	68.48	76.90	0.08	0.53	0.75	0.92
		800	14.70	17.50	20.82	24.41	28.50	33.22	44.40	50.78	56.99	64.21	72.25	80.92	0.09	0.56	0.80	0.98
		850	15.56	18.53	22.04	25.84	30.16	35.14	46.91	53.59	60.07	67.57	75.89	84.73	0.09	0.60	0.85	1.04
		900	16.43	19.55	23.27	27.25	31.80	37.03	49.37	56.34	63.08	70.84	79.37	88.36	0.10	0.63	0.90	1.10
		950	17.28	20.57	24.47	28.66	33.43	38.90	51.79	59.04	66.01	73.99	82.69	91.75	0.10	0.67	0.95	1.16
		1000	18.13	21.58	25.67	30.05	35.04	40.76	54.17	61.67	68.87	77.03	85.86	94.93	0.11	0.70	1.00	1.22
	10	1050	18.97	22.57	26.86	31.43	36.64	42.60	56.50	64.24	71.63	79.96	88.86	97.86	0.11	0.74	1.05	1.28
		1100	19.81	23.57	28.03	32.80	38.22	44.40	58.78	66.74	74.29	82.75	91.69	100.54	0.12	0.77	1.10	1.34
		1150	20.65	24.56	29.20	34.15	39.77	46.19	61.02	69.18	76.87	85.42	94.32	102.95	0.12	0.81	1.15	1.40
		1200	21.48	25.54	30.36	35.50	41.32	47.94	63.19	71.54	79.34	87.94	96.77	105.10	0.13	0.84	1.20	1.47
		1250	22.30	26.51	31.50	36.83	42.84	49.67	65.33	73.82	81.72	90.32	99.01	106.94	0.14	0.88	1.25	1.53
		1300	23.11	27.48	32.64	38.14	44.34	51.37	67.40	76.03	84.00	92.56	101.04	108.50	0.14	0.91	1.29	1.59
		1350	23.93	28.44	33.77	39.43	45.82	53.04	69.42	78.17	86.16	94.64	102.85	109.75	0.15	0.95	1.34	1.65
		1400	24.73	29.39	34.88	40.72	47.28	54.68	71.38	80.21	88.20	96.56	104.45	110.68	0.15	0.98	1.39	1.71
		1450	25.52	30.32	35.98	41.98	48.72	56.29	73.27	82.16	90.13	98.33	105.80	111.26	0.16	1.02	1.44	1.77
	15	1500	26.32	31.25	37.07	43.22	50.14	57.88	75.11	84.04	91.93	99.91	106.92		0.16	1.05	1.49	1.83
		1550	27.10	32.17	38.15	44.46	51.52	59.42	76.87	85.81	93.62	101.33	107.78		0.17	1.09	1.54	1.89
		1600	27.88	33.08	39.22	45.67	52.88	60.94	78.58	87.49	95.17	102.56	108.40		0.17	1.12	1.59	1.95
		1650	28.64	33.98	40.26	46.87	54.23	62.41	80.21	89.08	96.59	103.61	108.74		0.18	1.16	1.64	2.02
		1700	29.40	34.88	41.30	48.05	55.55	63.86	81.77	90.55	97.87	104.46			0.18	1.19	1.69	2.08
		1750	30.16	35.76	42.32	49.21	56.84	65.27	83.26	91.93	99.00	105.12			0.19	1.23	1.74	2.14
		1800	30.90	36.64	43.33	50.35	58.10	66.64	84.66	93.20	100.00	105.56			0.20	1.26	1.79	2.20
		1850	31.64	37.50	44.33	51.48	59.34	67.97	85.99	94.37	100.84	105.80			0.20	1.30	1.84	2.26
		1900	32.38	38.35	45.31	52.57	60.55	69.26	87.25	95.42	101.53				0.21	1.33	1.89	2.32
		1950	33.10	39.19	46.28	53.65	61.74	70.51	88.43	96.35	102.06				0.21	1.37	1.94	2.38
		2000	33.80	40.02	47.23	54.72	62.89	71.72	89.51	97.16	102.43				0.22	1.40	1.99	2.44
		2050	34.51	40.84	48.17	55.75	64.01	72.89	90.52	97.86	102.64				0.22	1.44	2.04	2.50
	20	2100	35.21	41.64	49.08	56.77	65.10	74.02	91.43	98.44	102.66				0.23	1.47	2.09	2.56
		2150	35.89	42.43	49.99	57.77	66.16	75.10	92.26	98.88					0.23	1.51	2.14	2.63
		2200	36.58	43.22	50.87	58.74	67.19	76.13	92.99	99.19					0.24	1.54	2.19	2.69
		2250	37.25	43.99	51.74	59.68	68.18	77.11	93.64	99.37					0.24	1.58	2.24	2.75
		2300	37.91	44.75	52.60	60.60	69.14	78.06	94.18	99.41					0.25	1.61	2.29	2.81
		2350	38.56	45.49	53.42	61.50	70.07	78.95	94.62						0.26	1.65	2.34	2.87
		2400	39.20	46.22	54.24	62.38	70.97	79.79	94.97						0.26	1.68	2.39	2.93
		2450	39.83	46.94	55.03	63.22	71.82	80.58	95.22						0.27	1.72	2.44	2.99
		2500	40.45	47.64	55.81	64.04	72.64	81.32	95.35						0.27	1.75	2.49	3.05
		2550	41.06	48.34	56.57	64.84	73.43	82.02	95.39						0.28	1.79	2.54	3.11
	25	2600	41.66	49.01	57.31	65.60	74.17	82.66	95.32						0.28	1.82	2.59	3.18
		2650	42.25	49.67	58.03	66.35	74.88	83.23							0.29	1.86	2.64	3.24
		2700	42.84	50.32	58.73	67.06	75.55	83.76							0.29	1.89	2.69	3.30
		2750	43.40	50.95	59.41	67.74	76.18	84.23							0.30	1.93	2.74	3.36
		2800	43.96	51.58	60.06	68.40	76.76	84.65							0.30	1.96	2.79	3.42
		2850	44.51	52.18	60.70	69.02	77.32	85.00							0.31	2.00	2.84	3.48
		2900	45.05	52.76	61.32	69.62	77.82	85.30							0.31	2.04	2.89	3.54
		2950	45.56	53.33	61.91	70.19	78.28	85.52							0.32	2.07	2.94	3.60
		3000	46.08	53.89	62.47	70.72	78.70	85.70							0.33	2.11	2.99	3.66
		3050	46.57	54.42	63.02	71.22	79.08	85.81							0.33	2.14	3.04	3.72
	30	3100	47.06	54.95	63.55	71.69	79.40	85.86							0.34	2.18	3.09	3.79
		3150	47.54	55.45	64.04	72.13	79.69	85.85							0.34	2.21	3.14	3.85
		3200	48.00	55.94	64.52	72.54	79.93	85.76							0.35	2.25	3.19	3.91
		3250	48.46	56.41	64.98	72.91	80.12	85.62							0.35	2.28	3.24	3.97
		3300	48.89	56.87	65.40	73.25	80.27	85.40							0.36	2.32	3.29	4.03
		3350	49.31	57.30	65.81	73.55	80.36								0.36	2.35	3.34	4.09
		3400	49.72	57.72	66.18	73.82	80.41								0.37	2.39	3.39	4.15
		3450	50.12	58.12	66.54	74.05	80.41								0.37	2.42	3.44	4.21
		3500	50.50	58.50	66.86	74.24	80.36								0.38	2.46	3.49	4.27
	35			40														
Dynamically balanced (for details see DIN 2211)															v [m/s]			
															Pulleys			

$v_{max} \leq 55$ m/s

v > 42 m/s.
Please consult our Application Engineering Department.

SUPERPOWER

POWER RATINGS

optibelt SUPER TX M=S PROFILE ZX/X10

NOMINAL POWER RATING P_N [kW]

FOR β = 180° AND L_d = 822 mm

Table 65

Pulleys	v [m/s]	n_k [min⁻¹]	Datum diameter of small pulley d_{dk} [mm] 40	45	50	56	63	71	80	90	100	112	Additional power [kW] per belt for speed ratio i 1.01 to 1.05	1.06 to 1.26	1.27 to 1.57	> 1.57
Statically balanced		**700**	0.22	0.27	0.32	0.37	0.44	0.51	0.59	0.67	0.76	0.85	0.00	0.02	0.03	0.04
		950	0.27	0.34	0.40	0.47	0.55	0.64	0.74	0.85	0.96	1.09	0.01	0.02	0.04	0.05
		1450	0.36	0.45	0.54	0.64	0.75	0.88	1.02	1.18	1.32	1.50	0.01	0.04	0.05	0.08
		2850	0.54	0.69	0.84	1.01	1.20	1.41	1.64	1.88	2.12	2.39	0.02	0.07	0.11	0.16
		100	0.05	0.06	0.07	0.08	0.09	0.10	0.12	0.14	0.15	0.17	0.00	0.00	0.00	0.01
		200	0.09	0.10	0.12	0.14	0.16	0.19	0.21	0.24	0.27	0.31	0.00	0.01	0.01	0.01
		300	0.12	0.14	0.16	0.19	0.22	0.26	0.30	0.34	0.38	0.43	0.00	0.01	0.01	0.02
		400	0.15	0.18	0.21	0.24	0.28	0.33	0.38	0.43	0.48	0.54	0.00	0.01	0.01	0.02
		500	0.17	0.21	0.25	0.29	0.34	0.39	0.45	0.51	0.58	0.65	0.00	0.01	0.02	0.03
		600	0.20	0.24	0.28	0.33	0.39	0.45	0.52	0.60	0.67	0.76	0.00	0.02	0.02	0.03
		700	0.22	0.27	0.32	0.37	0.44	0.51	0.59	0.67	0.76	0.85	0.00	0.02	0.03	0.04
	②	800	0.24	0.30	0.35	0.41	0.48	0.56	0.65	0.75	0.84	0.95	0.01	0.02	0.03	0.05
		900	0.26	0.32	0.38	0.45	0.53	0.62	0.71	0.82	0.92	1.04	0.01	0.02	0.03	0.05
		1000	0.28	0.35	0.41	0.49	0.57	0.67	0.77	0.89	1.00	1.13	0.01	0.03	0.04	0.06
		1100	0.30	0.37	0.44	0.52	0.62	0.72	0.83	0.95	1.07	1.21	0.01	0.03	0.04	0.06
		1200	0.32	0.40	0.47	0.56	0.66	0.77	0.89	1.02	1.15	1.30	0.01	0.03	0.04	0.07
		1300	0.34	0.42	0.50	0.59	0.70	0.81	0.94	1.08	1.22	1.38	0.01	0.03	0.05	0.07
		1400	0.36	0.44	0.52	0.62	0.74	0.86	1.00	1.14	1.29	1.46	0.01	0.04	0.05	0.08
		1500	0.37	0.46	0.55	0.65	0.77	0.90	1.05	1.20	1.36	1.53	0.01	0.04	0.06	0.09
		1600	0.39	0.48	0.58	0.69	0.81	0.95	1.10	1.26	1.42	1.61	0.01	0.04	0.06	0.09
		1700	0.40	0.50	0.60	0.71	0.85	0.99	1.15	1.32	1.49	1.68	0.01	0.04	0.06	0.10
		1800	0.42	0.52	0.62	0.74	0.88	1.03	1.20	1.38	1.55	1.75	0.01	0.05	0.07	0.10
		1900	0.43	0.54	0.65	0.77	0.91	1.07	1.24	1.43	1.61	1.82	0.01	0.05	0.07	0.11
		2000	0.44	0.56	0.67	0.80	0.95	1.11	1.29	1.48	1.67	1.89	0.01	0.05	0.07	0.11
		2100	0.46	0.57	0.69	0.83	0.98	1.15	1.34	1.53	1.73	1.95	0.01	0.05	0.08	0.12
		2200	0.47	0.59	0.71	0.85	1.01	1.19	1.38	1.59	1.78	2.01	0.01	0.06	0.08	0.13
		2300	0.48	0.61	0.73	0.88	1.04	1.22	1.42	1.63	1.84	2.08	0.02	0.06	0.08	0.13
	⑤	2400	0.49	0.62	0.75	0.90	1.07	1.26	1.46	1.68	1.89	2.14	0.02	0.06	0.09	0.14
		2500	0.50	0.64	0.77	0.93	1.10	1.29	1.50	1.73	1.95	2.19	0.02	0.06	0.09	0.14
		2600	0.51	0.65	0.79	0.95	1.13	1.33	1.54	1.78	2.00	2.25	0.02	0.07	0.10	0.15
		2700	0.52	0.67	0.81	0.97	1.16	1.36	1.58	1.82	2.05	2.31	0.02	0.07	0.10	0.15
		2800	0.53	0.68	0.83	0.99	1.18	1.39	1.62	1.86	2.09	2.36	0.02	0.07	0.10	0.16
		2900	0.54	0.70	0.84	1.02	1.21	1.43	1.66	1.91	2.14	2.41	0.02	0.07	0.11	0.17
		3000	0.55	0.71	0.86	1.04	1.24	1.46	1.70	1.95	2.19	2.46	0.02	0.08	0.11	0.17
		3100	0.56	0.72	0.88	1.06	1.26	1.49	1.73	1.99	2.23	2.51	0.02	0.08	0.11	0.18
		3200	0.57	0.74	0.89	1.08	1.29	1.52	1.77	2.03	2.28	2.56	0.02	0.08	0.12	0.18
		3300	0.58	0.75	0.91	1.10	1.31	1.55	1.80	2.07	2.32	2.60	0.02	0.08	0.12	0.19
		3400	0.59	0.76	0.93	1.12	1.34	1.57	1.83	2.10	2.36	2.65	0.02	0.09	0.13	0.19
		3500	0.60	0.77	0.94	1.14	1.36	1.60	1.86	2.14	2.40	2.69	0.02	0.09	0.13	0.20
		3600	0.60	0.78	0.95	1.16	1.38	1.63	1.89	2.17	2.44	2.73	0.02	0.09	0.13	0.21
		3700	0.61	0.79	0.97	1.17	1.40	1.66	1.93	2.21	2.47	2.77	0.03	0.09	0.14	0.21
		3800	0.62	0.80	0.98	1.19	1.43	1.68	1.95	2.24	2.51	2.81	0.03	0.10	0.14	0.22
		3900	0.62	0.81	1.00	1.21	1.45	1.71	1.98	2.27	2.54	2.84	0.03	0.10	0.14	0.22
		4000	0.63	0.82	1.01	1.23	1.47	1.73	2.01	2.30	2.58	2.88	0.03	0.10	0.15	0.23
		4100	0.64	0.83	1.02	1.24	1.49	1.75	2.04	2.33	2.61	2.91	0.03	0.10	0.15	0.23
		4200	0.64	0.84	1.03	1.26	1.51	1.78	2.07	2.36	2.64	2.94	0.03	0.11	0.15	0.24
		4300	0.65	0.85	1.05	1.27	1.53	1.80	2.09	2.39	2.67	2.97	0.03	0.11	0.16	0.25
		4400	0.65	0.86	1.06	1.29	1.54	1.82	2.12	2.42	2.70	3.00	0.03	0.11	0.16	0.25
		4500	0.66	0.87	1.07	1.30	1.56	1.84	2.14	2.44	2.72	3.02	0.03	0.12	0.17	0.26
		4600	0.66	0.87	1.08	1.32	1.58	1.86	2.16	2.47	2.75	3.05	0.03	0.12	0.17	0.26
		4700	0.67	0.88	1.09	1.33	1.60	1.88	2.18	2.49	2.77	3.07	0.03	0.12	0.17	0.27
	⑩	4800	0.67	0.89	1.10	1.34	1.61	1.90	2.21	2.52	2.80	3.09	0.03	0.12	0.18	0.27
		4900	0.68	0.90	1.11	1.36	1.63	1.92	2.23	2.54	2.82	3.11	0.03	0.13	0.18	0.28
		5000	0.68	0.90	1.12	1.37	1.64	1.94	2.25	2.56	2.84	3.13	0.03	0.13	0.18	0.29
		5100	0.68	0.91	1.13	1.38	1.66	1.96	2.27	2.58	2.86	3.14	0.03	0.13	0.19	0.29
		5200	0.69	0.92	1.14	1.39	1.67	1.97	2.28	2.60	2.87	3.16	0.04	0.13	0.19	0.30
		5300	0.69	0.92	1.15	1.40	1.69	1.99	2.30	2.61	2.89	3.17	0.04	0.14	0.20	0.30
		5400	0.69	0.93	1.15	1.41	1.70	2.00	2.32	2.63	2.91	3.18	0.04	0.14	0.20	0.31
		5500	0.69	0.93	1.16	1.42	1.71	2.02	2.33	2.65	2.92	3.19	0.04	0.14	0.20	0.31
		5600	0.70	0.94	1.17	1.43	1.72	2.03	2.35	2.66	2.93	3.20	0.04	0.14	0.21	0.32
		5800	0.70	0.95	1.18	1.45	1.75	2.06	2.38	2.69	2.95	3.21	0.04	0.15	0.21	0.33
		6000	0.70	0.96	1.20	1.47	1.77	2.08	2.40	2.71	2.97	3.21	0.04	0.15	0.22	0.34
		6200	0.71	0.96	1.21	1.49	1.79	2.10	2.42	2.72	2.97	3.20	0.04	0.16	0.23	0.35
		6400	0.71	0.97	1.22	1.50	1.81	2.12	2.44	2.74	2.98	3.18	0.04	0.16	0.24	0.37
		6600	0.71	0.98	1.23	1.51	1.82	2.14	2.45	2.74	2.97	3.16	0.04	0.17	0.24	0.38
		6800	0.71	0.98	1.24	1.52	1.83	2.15	2.46	2.75	2.96	3.13	0.05	0.17	0.25	0.39
		7000	0.71	0.98	1.24	1.53	1.84	2.16	2.47	2.74	2.95	3.09	0.05	0.18	0.26	0.40
	⑮	7200	0.71	0.98	1.25	1.54	1.85	2.17	2.47	2.74	2.93	3.04	0.05	0.18	0.27	0.41
		7400	0.70	0.99	1.25	1.55	1.86	2.17	2.47	2.73	2.90	2.99	0.05	0.19	0.27	0.42
		7600	0.70	0.99	1.25	1.55	1.86	2.18	2.47	2.71	v > 30 m/s.		0.05	0.19	0.28	0.43
		7800	0.70	0.99	1.26	1.55	1.87	2.18	2.46	2.69	Please consult our		0.05	0.20	0.29	0.45
		8000	0.69	0.98	1.26	1.56	1.87	2.17	2.45	2.66	Application Engineering		0.05	0.20	0.30	0.46
		8200	0.68	0.98	1.25	1.56	1.87	2.17	2.43		Department.		0.06	0.21	0.30	0.47
		8400	0.68	0.98	1.25	1.55	1.86	2.16	2.41				0.06	0.21	0.31	0.48
					⑳		㉕	㉚							v [m/s]	
								Dynamically balanced (for details see DIN 2211)							Pulleys	

optibelt SUPER TX M=S

POWER RATINGS

optibelt SUPER TX M=S PROFILE AX/X13

NOMINAL POWER RATING P_N [kW]

FOR β = 180° AND L_d = 1730 mm

Table 66

Pulleys	v [m/s]	n_k [min⁻¹]	Datum diameter of small pulley d_{dk} [mm] 63	71	80	90	95	100	106	112	118	125	132	140	150	160	180	Additional power [kW] per belt for speed ratio i 1.01 to 1.05	1.06 to 1.26	1.27 to 1.57	> 1.57
Statically balanced		**700**	0.67	0.86	1.07	1.29	1.40	1.51	1.64	1.77	1.90	2.04	2.19	2.35	2.56	2.76	3.15	0.02	0.08	0.12	0.18
		950	0.82	1.06	1.33	1.61	1.76	1.90	2.06	2.23	2.39	2.58	2.76	2.97	3.23	3.49	3.98	0.03	0.11	0.16	0.24
		1450	1.05	1.39	1.76	2.16	2.36	2.56	2.79	3.02	3.25	3.51	3.76	4.05	4.40	4.74	5.41	0.04	0.17	0.24	0.37
		2850	1.39	1.96	2.58	3.23	3.55	3.86	4.23	4.58	4.92	5.31	5.68	6.09	6.57	7.03	7.84	0.09	0.33	0.47	0.73
		100	0.16	0.19	0.23	0.28	0.30	0.32	0.34	0.37	0.39	0.42	0.45	0.48	0.52	0.56	0.63	0.00	0.01	0.02	0.03
		200	0.27	0.34	0.41	0.49	0.52	0.56	0.61	0.65	0.70	0.75	0.80	0.86	0.93	1.00	1.14	0.01	0.02	0.03	0.05
		300	0.37	0.46	0.56	0.67	0.73	0.78	0.84	0.91	0.97	1.04	1.11	1.20	1.30	1.40	1.59	0.01	0.03	0.05	0.08
		400	0.46	0.57	0.70	0.84	0.91	0.98	1.06	1.14	1.22	1.32	1.41	1.51	1.64	1.77	2.02	0.01	0.05	0.07	0.10
		500	0.54	0.68	0.83	1.00	1.08	1.17	1.27	1.36	1.46	1.57	1.68	1.81	1.96	2.11	2.41	0.02	0.06	0.08	0.13
		600	0.61	0.77	0.95	1.15	1.25	1.34	1.46	1.57	1.68	1.81	1.94	2.09	2.27	2.44	2.79	0.02	0.07	0.10	0.15
	②	700	0.67	0.86	1.07	1.29	1.40	1.51	1.64	1.77	1.90	2.04	2.19	2.35	2.56	2.76	3.15	0.02	0.08	0.12	0.18
		800	0.74	0.94	1.17	1.42	1.55	1.67	1.81	1.96	2.10	2.26	2.43	2.61	2.84	3.06	3.50	0.02	0.09	0.13	0.21
		900	0.79	1.02	1.28	1.55	1.69	1.82	1.98	2.14	2.30	2.48	2.65	2.86	3.10	3.35	3.82	0.03	0.10	0.15	0.23
		1000	0.85	1.10	1.37	1.67	1.82	1.97	2.14	2.31	2.48	2.68	2.87	3.09	3.36	3.62	4.14	0.03	0.11	0.17	0.26
		1100	0.90	1.17	1.47	1.79	1.95	2.11	2.30	2.48	2.66	2.88	3.08	3.32	3.61	3.89	4.44	0.03	0.13	0.18	0.28
		1200	0.94	1.23	1.56	1.90	2.07	2.24	2.44	2.64	2.84	3.06	3.29	3.54	3.84	4.15	4.73	0.04	0.14	0.20	0.31
		1300	0.99	1.30	1.64	2.01	2.19	2.37	2.59	2.80	3.01	3.25	3.48	3.75	4.07	4.39	5.01	0.04	0.15	0.22	0.33
		1400	1.03	1.36	1.72	2.11	2.31	2.50	2.72	2.95	3.17	3.42	3.67	3.95	4.29	4.63	5.28	0.04	0.16	0.23	0.36
		1500	1.07	1.42	1.80	2.21	2.42	2.62	2.86	3.09	3.32	3.59	3.85	4.14	4.50	4.86	5.53	0.05	0.17	0.25	0.38
	⑤	1600	1.10	1.47	1.87	2.31	2.52	2.74	2.99	3.23	3.47	3.75	4.03	4.33	4.71	5.07	5.78	0.05	0.18	0.26	0.41
		1700	1.14	1.52	1.95	2.40	2.63	2.85	3.11	3.37	3.62	3.91	4.19	4.51	4.90	5.28	6.01	0.05	0.20	0.28	0.44
		1800	1.17	1.57	2.01	2.49	2.73	2.96	3.23	3.50	3.76	4.06	4.36	4.69	5.09	5.48	6.23	0.05	0.21	0.30	0.46
		1900	1.20	1.62	2.08	2.58	2.82	3.06	3.34	3.62	3.89	4.21	4.51	4.85	5.27	5.67	6.44	0.06	0.22	0.31	0.49
		2000	1.23	1.66	2.14	2.66	2.91	3.16	3.45	3.74	4.02	4.35	4.66	5.01	5.44	5.86	6.64	0.06	0.23	0.33	0.51
		2100	1.25	1.71	2.20	2.74	3.00	3.26	3.56	3.86	4.15	4.48	4.80	5.17	5.60	6.03	6.83	0.06	0.24	0.35	0.54
		2200	1.28	1.75	2.26	2.81	3.08	3.35	3.66	3.97	4.27	4.61	4.94	5.31	5.76	6.19	7.00	0.07	0.25	0.36	0.56
		2300	1.30	1.78	2.32	2.89	3.16	3.44	3.76	4.07	4.38	4.73	5.07	5.45	5.91	6.35	7.16	0.07	0.26	0.38	0.59
		2400	1.32	1.82	2.37	2.96	3.24	3.52	3.85	4.18	4.49	4.85	5.20	5.58	6.05	6.49	7.31	0.07	0.28	0.40	0.62
		2500	1.34	1.85	2.42	3.02	3.32	3.60	3.94	4.27	4.59	4.96	5.32	5.71	6.18	6.63	7.45	0.08	0.29	0.41	0.64
		2600	1.35	1.89	2.47	3.09	3.39	3.68	4.03	4.37	4.69	5.07	5.43	5.83	6.30	6.75	7.58	0.08	0.30	0.43	0.67
		2700	1.37	1.92	2.51	3.15	3.46	3.76	4.11	4.45	4.79	5.17	5.53	5.94	6.42	6.87	7.69	0.08	0.31	0.45	0.69
		2800	1.38	1.94	2.55	3.21	3.52	3.83	4.19	4.54	4.88	5.26	5.63	6.04	6.52	6.98	7.79	0.09	0.32	0.46	0.72
		2900	1.39	1.97	2.60	3.26	3.58	3.90	4.26	4.62	4.96	5.35	5.73	6.14	6.62	7.07	7.88	0.09	0.33	0.48	0.74
		3000	1.40	2.00	2.63	3.31	3.64	3.96	4.33	4.69	5.04	5.44	5.82	6.23	6.71	7.16	7.95	0.09	0.34	0.50	0.77
	⑩	3100	1.41	2.02	2.67	3.36	3.70	4.02	4.40	4.77	5.12	5.52	5.90	6.31	6.79	7.24	8.01	0.09	0.36	0.51	0.80
		3200	1.42	2.04	2.70	3.41	3.75	4.08	4.46	4.83	5.19	5.59	5.97	6.38	6.86	7.30	8.06	0.10	0.37	0.53	0.82
		3300	1.43	2.06	2.74	3.45	3.80	4.13	4.52	4.89	5.25	5.66	6.04	6.45	6.93	7.36	8.09	0.10	0.38	0.55	0.85
		3400	1.43	2.07	2.76	3.49	3.84	4.18	4.57	4.95	5.31	5.72	6.10	6.51	6.98	7.41	8.11	0.10	0.39	0.56	0.87
		3500	1.43	2.09	2.79	3.53	3.88	4.23	4.62	5.00	5.37	5.77	6.15	6.56	7.03	7.44	8.11	0.11	0.40	0.58	0.90
		3600	1.44	2.10	2.82	3.57	3.92	4.27	4.67	5.05	5.42	5.82	6.20	6.61	7.06	7.47		0.11	0.41	0.60	0.92
		3700	1.44	2.11	2.84	3.60	3.96	4.31	4.71	5.10	5.46	5.87	6.24	6.64	7.09	7.48		0.11	0.42	0.61	0.95
		3800	1.43	2.12	2.86	3.63	3.99	4.34	4.75	5.14	5.50	5.90	6.28	6.67	7.11	7.48		0.12	0.44	0.63	0.98
		3900	1.43	2.13	2.88	3.65	4.02	4.38	4.78	5.17	5.53	5.93	6.30	6.69	7.11	7.47		0.12	0.45	0.65	1.00
		4000	1.43	2.14	2.89	3.68	4.05	4.40	4.81	5.20	5.56	5.96	6.32	6.70	7.11	7.45		0.12	0.46	0.66	1.03
		4100	1.42	2.14	2.91	3.70	4.07	4.43	4.84	5.22	5.59	5.98	6.34	6.70	7.10			0.12	0.47	0.68	1.05
		4200	1.42	2.14	2.92	3.72	4.09	4.45	4.86	5.24	5.60	5.99	6.34	6.70	7.07			0.13	0.48	0.70	1.08
		4300	1.41	2.15	2.93	3.73	4.11	4.47	4.88	5.26	5.61	6.00	6.34	6.68	7.04			0.13	0.49	0.71	1.10
		4400	1.40	2.14	2.93	3.74	4.12	4.48	4.89	5.27	5.62	6.00	6.33	6.66	7.00			0.13	0.51	0.73	1.13
		4500	1.39	2.14	2.94	3.75	4.13	4.49	4.90	5.27	5.62	5.99	6.31	6.63	6.94			0.14	0.52	0.74	1.15
	⑮	4600	1.37	2.14	2.94	3.76	4.14	4.49	4.90	5.27	5.61	5.97	6.29					0.14	0.53	0.76	1.18
		4700	1.36	2.13	2.94	3.76	4.14	4.50	4.90	5.27	5.60	5.95	6.25					0.14	0.54	0.78	1.21
		4800	1.34	2.12	2.94	3.76	4.14	4.49	4.89	5.26	5.59	5.92	6.21					0.15	0.55	0.79	1.23
		4900	1.33	2.11	2.93	3.76	4.13	4.49	4.88	5.24	5.56	5.89	6.16					0.15	0.56	0.81	1.26
		5000	1.31	2.10	2.92	3.75	4.13	4.48	4.87	5.22	5.53	5.85	6.11					0.15	0.57	0.83	1.28
		5100	1.29	2.09	2.91	3.74	4.11	4.46	4.85	5.19	5.50							0.16	0.59	0.84	1.31
		5200	1.27	2.07	2.90	3.73	4.10	4.45	4.82	5.16	5.46							0.16	0.60	0.86	1.33
		5300	1.25	2.05	2.89	3.71	4.08	4.42	4.79	5.12	5.41							0.16	0.61	0.88	1.36
		5400	1.22	2.04	2.87	3.69	4.06	4.40	4.76	5.08	5.35							0.16	0.62	0.89	1.39
		5500	1.20	2.01	2.85	3.67	4.03	4.37	4.72	5.03	5.29							0.17	0.63	0.91	1.41
		5600	1.17	1.99	2.83	3.64	4.00	4.33	4.68									0.17	0.64	0.93	1.44
		5700	1.14	1.97	2.80	3.61	3.97	4.29	4.63									0.17	0.65	0.94	1.46
		5800	1.11	1.94	2.78	3.58	3.93	4.25	4.58									0.18	0.67	0.96	1.49
		5900	1.08	1.91	2.75	3.55	3.89	4.20	4.52									0.18	0.68	0.98	1.51
		6000	1.05	1.88	2.72	3.51	3.85	4.15	4.45									0.18	0.69	0.99	1.54
														v > 30 m/s. Please consult our Application Engineering Department.							
			⑳	㉕			㉚											v [m/s]			
								Dynamically balanced (for details see DIN 2211)										Pulleys			

optibelt SUPER TX/S

POWER RATINGS

optibelt SUPER TX M=S PROFILE BX/X17

NOMINAL POWER RATING P_N [kW]

FOR β = 180° AND L_d = 2280 mm

Table 67

Pulleys	v [m/s]	n_k [min⁻¹]	Datum diameter of small pulley d_{dk} [mm] 90	100	106	112	118	125	132	140	160	180	190	200	212	224	250	280	Additional power [kW] per belt for speed ratio i 1.01 to 1.05	1.06 to 1.26	1.27 to 1.57	> 1.57
Statically balanced		**700**	1.70	2.01	2.20	2.38	2.56	2.77	2.98	3.21	3.79	4.35	4.63	4.90	5.23	5.55	6.22	6.98	0.03	0.12	0.18	0.28
		950	2.12	2.52	2.76	2.99	3.23	3.49	3.76	4.06	4.79	5.51	5.86	6.20	6.61	7.01	7.85	8.78	0.04	0.17	0.24	0.37
		1450	2.82	3.39	3.72	4.05	4.37	4.75	5.11	5.53	6.53	7.49	7.95	8.40	8.94	9.45	10.52	11.66	0.07	0.26	0.37	0.57
		2850	4.16	5.06	5.59	6.10	6.60	7.16	7.70	8.30	9.67	10.86	11.39	11.87	12.39	12.82	13.51	13.82	0.13	0.50	0.72	1.12
		100	0.37	0.42	0.46	0.49	0.53	0.57	0.61	0.65	0.76	0.87	0.93	0.98	1.04	1.11	1.24	1.40	0.00	0.02	0.03	0.04
		200	0.64	0.75	0.82	0.88	0.94	1.01	1.09	1.17	1.37	1.57	1.67	1.76	1.88	1.99	2.24	2.52	0.01	0.04	0.05	0.08
		300	0.89	1.04	1.13	1.22	1.31	1.41	1.52	1.63	1.92	2.20	2.34	2.47	2.63	2.80	3.14	3.53	0.01	0.05	0.08	0.12
		400	1.11	1.31	1.42	1.54	1.65	1.78	1.91	2.06	2.43	2.78	2.96	3.13	3.34	3.54	3.98	4.47	0.02	0.07	0.10	0.16
		500	1.32	1.56	1.70	1.83	1.97	2.13	2.29	2.47	2.90	3.33	3.54	3.75	4.00	4.24	4.77	5.36	0.02	0.09	0.13	0.20
		600	1.51	1.79	1.95	2.11	2.27	2.46	2.64	2.85	3.36	3.85	4.10	4.34	4.63	4.91	5.51	6.19	0.03	0.11	0.15	0.24
		700	1.70	2.01	2.20	2.38	2.56	2.77	2.98	3.21	3.79	4.35	4.63	4.90	5.23	5.55	6.22	6.98	0.03	0.12	0.18	0.28
		800	1.87	2.22	2.43	2.63	2.84	3.07	3.30	3.56	4.20	4.83	5.14	5.44	5.80	6.15	6.90	7.73	0.04	0.14	0.20	0.32
		900	2.04	2.42	2.65	2.87	3.10	3.36	3.61	3.90	4.60	5.29	5.62	5.95	6.34	6.73	7.54	8.44	0.04	0.16	0.23	0.35
		1000	2.19	2.61	2.86	3.11	3.35	3.63	3.91	4.22	4.98	5.72	6.09	6.44	6.86	7.28	8.15	9.12	0.05	0.18	0.25	0.39
	5	1100	2.35	2.80	3.07	3.33	3.59	3.89	4.19	4.53	5.35	6.14	6.53	6.91	7.36	7.80	8.73	9.75	0.05	0.19	0.28	0.43
		1200	2.49	2.98	3.26	3.55	3.83	4.15	4.47	4.83	5.70	6.55	6.96	7.36	7.84	8.31	9.28	10.34	0.06	0.21	0.31	0.47
		1300	2.63	3.15	3.45	3.75	4.05	4.39	4.73	5.11	6.04	6.94	7.37	7.80	8.29	8.78	9.80	10.90	0.06	0.23	0.33	0.51
		1400	2.76	3.31	3.63	3.95	4.27	4.63	4.99	5.39	6.37	7.31	7.76	8.21	8.73	9.23	10.29	11.42	0.07	0.25	0.36	0.55
		1500	2.89	3.47	3.81	4.14	4.48	4.86	5.23	5.66	6.68	7.66	8.14	8.60	9.14	9.66	10.74	11.90	0.07	0.26	0.38	0.59
		1600	3.01	3.62	3.98	4.33	4.68	5.08	5.47	5.91	6.98	8.00	8.49	8.97	9.53	10.07	11.17	12.33	0.07	0.28	0.41	0.63
		1700	3.13	3.76	4.14	4.51	4.87	5.29	5.70	6.16	7.27	8.32	8.83	9.32	9.89	10.44	11.56	12.73	0.08	0.30	0.43	0.67
		1800	3.24	3.90	4.30	4.68	5.06	5.49	5.92	6.40	7.55	8.63	9.15	9.65	10.24	10.80	11.92	13.08	0.08	0.32	0.46	0.71
		1900	3.35	4.04	4.45	4.85	5.24	5.69	6.13	6.62	7.81	8.92	9.45	9.97	10.56	11.12	12.25	13.38	0.09	0.33	0.48	0.75
		2000	3.45	4.17	4.59	5.00	5.41	5.88	6.33	6.84	8.06	9.20	9.74	10.26	10.86	11.42	12.54	13.64	0.09	0.35	0.51	0.79
		2100	3.55	4.29	4.73	5.16	5.58	6.06	6.53	7.05	8.30	9.46	10.01	10.53	11.13	11.69	12.80	13.86	0.10	0.37	0.53	0.83
	10	2200	3.64	4.41	4.86	5.30	5.73	6.23	6.71	7.25	8.52	9.70	10.25	10.78	11.38	11.94	13.02	14.02	0.10	0.39	0.56	0.87
		2300	3.73	4.53	4.99	5.44	5.89	6.39	6.89	7.44	8.74	9.93	10.48	11.01	11.61	12.16	13.20	14.14	0.11	0.41	0.58	0.91
		2400	3.82	4.63	5.11	5.58	6.03	6.55	7.06	7.62	8.94	10.14	10.69	11.22	11.81	12.35	13.35	14.20	0.11	0.42	0.61	0.95
		2500	3.90	4.74	5.23	5.70	6.17	6.70	7.21	7.78	9.12	10.33	10.88	11.40	11.98	12.51	13.46	14.21	0.12	0.44	0.64	0.99
		2600	3.98	4.84	5.34	5.83	6.30	6.84	7.37	7.94	9.30	10.51	11.06	11.57	12.13	12.64	13.52		0.12	0.46	0.66	1.02
		2700	4.05	4.93	5.44	5.94	6.43	6.98	7.51	8.09	9.46	10.66	11.21	11.71	12.25	12.73	13.55		0.13	0.48	0.69	1.06
		2800	4.12	5.02	5.54	6.05	6.54	7.10	7.64	8.23	9.60	10.80	11.34	11.82	12.35	12.80	13.53		0.13	0.49	0.71	1.10
		2900	4.19	5.11	5.64	6.15	6.65	7.22	7.77	8.36	9.73	10.92	11.44	11.92	12.42	12.84	13.47		0.14	0.51	0.74	1.14
		3000	4.25	5.19	5.73	6.25	6.76	7.33	7.88	8.48	9.85	11.03	11.53	11.99	12.45	12.84	13.37		0.14	0.53	0.76	1.18
		3100	4.31	5.26	5.81	6.34	6.86	7.43	7.99	8.59	9.96	11.11	11.60	12.03					0.15	0.55	0.79	1.22
	15	3200	4.36	5.33	5.89	6.43	6.95	7.53	8.09	8.69	10.05	11.17	11.64	12.05					0.15	0.56	0.81	1.26
		3300	4.41	5.39	5.96	6.50	7.03	7.62	8.18	8.78	10.13	11.22	11.66	12.04					0.15	0.58	0.84	1.30
		3400	4.46	5.45	6.03	6.58	7.11	7.70	8.26	8.86	10.19	11.24	11.66	12.00					0.16	0.60	0.86	1.34
		3500	4.50	5.51	6.09	6.64	7.17	7.77	8.33	8.93	10.23	11.24	11.63	11.94					0.16	0.62	0.89	1.38
		3600	4.54	5.56	6.14	6.70	7.24	7.83	8.39	8.98	10.26	11.23							0.17	0.63	0.92	1.42
		3700	4.57	5.60	6.19	6.75	7.29	7.88	8.44	9.03	10.28	11.19							0.17	0.65	0.94	1.46
		3800	4.60	5.64	6.24	6.80	7.34	7.93	8.48	9.06	10.28	11.13							0.18	0.67	0.97	1.50
		3900	4.63	5.68	6.27	6.84	7.38	7.96	8.51	9.08	10.26	11.05							0.18	0.69	0.99	1.54
		4000	4.65	5.71	6.31	6.87	7.41	7.99	8.53	9.09	10.23	10.94							0.19	0.71	1.02	1.58
		4100	4.67	5.73	6.33	6.90	7.43	8.01	8.54	9.09	10.18								0.19	0.72	1.04	1.62
	20	4200	4.68	5.75	6.35	6.92	7.45	8.02	8.55	9.08	10.11								0.20	0.74	1.07	1.65
		4300	4.69	5.77	6.37	6.93	7.46	8.02	8.54	9.06	10.02								0.20	0.76	1.09	1.69
		4400	4.70	5.78	6.38	6.94	7.46	8.02	8.52	9.02	9.92								0.21	0.78	1.12	1.73
		4500	4.70	5.78	6.38	6.93	7.45	8.00	8.49	8.97	9.80								0.21	0.79	1.14	1.77
		4600	4.70	5.78	6.37	6.93	7.44	7.97	8.45										0.22	0.81	1.17	1.81
		4700	4.69	5.77	6.36	6.91	7.41	7.94	8.39										0.22	0.83	1.19	1.85
		4800	4.68	5.76	6.35	6.89	7.38	7.89	8.33										0.22	0.85	1.22	1.89
		4900	4.66	5.74	6.32	6.86	7.34	7.84	8.26										0.23	0.86	1.25	1.93
		5000	4.64	5.72	6.29	6.82	7.29	7.77	8.17										0.23	0.88	1.27	1.97
															v > 30 m/s. Please consult our Application Engineering Department.							
			25			30													v [m/s]			
							Dynamically balanced (for details see DIN 2211)												Pulleys			

optibelt

POWER RATINGS

optibelt SUPER TX M=S PROFILE CX/X22

NOMINAL POWER RATING P_N [kW]

FOR β = 180° AND L_d = 3808 mm

Table 68

v [m/s]	n_k [min^{-1}]	140	150	160	180	200	224	250	280	315	335	355	400	450	500	630	1.01 to 1.05	1.06 to 1.26	1.27 to 1.57	> 1.57
	700	4.81	5.29	5.76	6.69	7.59	8.65	9.77	11.03	12.45	13.24	14.02	15.70	17.48	19.17	23.07	0.06	0.23	0.33	0.52
	950	6.07	6.68	7.28	8.46	9.61	10.94	12.34	13.89	15.62	16.58	17.50	19.46	21.47	23.28	26.99	0.08	0.32	0.45	0.70
	1450	8.23	9.07	9.89	11.49	13.01	14.76	16.54	18.44	20.47	21.52	22.50	24.39	25.99	27.00	26.57	0.13	0.48	0.69	1.07
	2850	12.16	13.34	14.45	16.45	18.14	19.73	20.88	21.39	20.80							0.25	0.95	1.36	2.11
	50	0.54	0.59	0.64	0.74	0.83	0.94	1.06	1.20	1.35	1.44	1.53	1.72	1.94	2.15	2.69	0.00	0.02	0.02	0.04
	100	0.98	1.07	1.16	1.34	1.51	1.72	1.94	2.19	2.47	2.63	2.79	3.15	3.54	3.93	4.90	0.01	0.03	0.05	0.07
	150	1.38	1.51	1.64	1.89	2.14	2.43	2.74	3.09	3.50	3.73	3.96	4.46	5.01	5.56	6.93	0.01	0.05	0.07	0.11
	200	1.76	1.92	2.08	2.41	2.72	3.10	3.50	3.95	4.47	4.76	5.06	5.70	6.40	7.09	8.83	0.02	0.07	0.10	0.15
	250	2.11	2.31	2.51	2.90	3.28	3.74	4.22	4.77	5.40	5.75	6.10	6.88	7.72	8.55	10.62	0.02	0.08	0.12	0.19
	300	2.45	2.69	2.92	3.37	3.82	4.35	4.91	5.55	6.29	6.70	7.10	8.00	8.98	9.94	12.33	0.03	0.10	0.14	0.22
	350	2.78	3.05	3.31	3.83	4.34	4.94	5.59	6.31	7.14	7.61	8.07	9.09	10.19	11.27	13.95	0.03	0.12	0.17	0.26
	400	3.10	3.39	3.69	4.27	4.84	5.52	6.23	7.05	7.97	8.49	9.00	10.14	11.36	12.55	15.49	0.04	0.13	0.19	0.30
	450	3.40	3.73	4.06	4.70	5.33	6.08	6.86	7.76	8.77	9.34	9.91	11.15	12.48	13.78	16.96	0.04	0.15	0.22	0.33
	500	3.70	4.06	4.42	5.12	5.81	6.62	7.48	8.45	9.55	10.17	10.78	12.12	13.56	14.95	18.34	0.04	0.17	0.24	0.37
	550	3.99	4.38	4.76	5.52	6.27	7.15	8.07	9.12	10.31	10.97	11.63	13.07	14.60	16.08	19.65	0.05	0.18	0.26	0.41
	600	4.27	4.69	5.10	5.92	6.72	7.66	8.65	9.77	11.04	11.75	12.45	13.98	15.60	17.16	20.87	0.05	0.20	0.29	0.44
	650	4.55	4.99	5.44	6.31	7.16	8.16	9.22	10.41	11.76	12.51	13.25	14.86	16.56	18.19	22.02	0.06	0.22	0.31	0.48
5	700	4.81	5.29	5.76	6.69	7.59	8.65	9.77	11.03	12.45	13.24	14.02	15.70	17.48	19.17	23.07	0.06	0.23	0.33	0.52
	750	5.08	5.58	6.08	7.06	8.01	9.13	10.31	11.64	13.13	13.95	14.76	16.52	18.36	20.10	24.04	0.07	0.25	0.36	0.56
	800	5.33	5.86	6.39	7.42	8.42	9.60	10.84	12.22	13.78	14.64	15.48	17.30	19.20	20.97	24.93	0.07	0.27	0.38	0.59
	850	5.58	6.14	6.69	7.77	8.83	10.06	11.35	12.80	14.41	15.31	16.18	18.06	20.00	21.80	25.71	0.07	0.28	0.41	0.63
	900	5.83	6.42	6.99	8.12	9.22	10.50	11.85	13.35	15.03	15.95	16.85	18.78	20.76	22.57	26.40	0.08	0.30	0.43	0.67
	950	6.07	6.68	7.28	8.46	9.61	10.94	12.34	13.89	15.62	16.58	17.50	19.46	21.47	23.28	26.99	0.08	0.32	0.45	0.70
	1000	6.31	6.94	7.57	8.79	9.98	11.37	12.82	14.42	16.20	17.17	18.12	20.12	22.14	23.94	27.48	0.09	0.33	0.48	0.74
	1050	6.54	7.20	7.85	9.12	10.35	11.78	13.28	14.93	16.76	17.75	18.71	20.74	22.76	24.53	27.86	0.09	0.35	0.50	0.78
	1100	6.77	7.45	8.12	9.44	10.71	12.19	13.73	15.42	17.29	18.31	19.28	21.32	23.34	25.07	28.13	0.10	0.36	0.53	0.82
	1150	6.99	7.70	8.39	9.75	11.06	12.59	14.17	15.90	17.81	18.84	19.82	21.87	23.87	25.55	28.28	0.10	0.38	0.55	0.85
	1200	7.21	7.94	8.66	10.06	11.41	12.97	14.59	16.37	18.30	19.35	20.34	22.39	24.35	25.96	28.31	0.11	0.40	0.57	0.89
	1250	7.42	8.17	8.91	10.35	11.75	13.35	15.01	16.81	18.78	19.83	20.83	22.87	24.78	26.31	28.23	0.11	0.41	0.60	0.93
	1300	7.63	8.40	9.17	10.65	12.07	13.72	15.41	17.25	19.23	20.29	21.29	23.31	25.16			0.11	0.43	0.62	0.96
10	1350	7.83	8.63	9.41	10.93	12.39	14.07	15.80	17.66	19.67	20.73	21.72	23.71	25.49			0.12	0.45	0.65	1.00
	1400	8.04	8.85	9.66	11.21	12.71	14.42	16.17	18.06	20.08	21.14	22.12	24.07	25.77			0.12	0.46	0.67	1.04
	1450	8.23	9.07	9.89	11.49	13.01	14.76	16.54	18.44	20.47	21.52	22.50	24.39	25.99			0.13	0.48	0.69	1.07
	1500	8.43	9.28	10.12	11.75	13.31	15.08	16.89	18.81	20.83	21.88	22.84	24.67	26.15			0.13	0.50	0.72	1.11
	1550	8.61	9.49	10.35	12.01	13.60	15.40	17.22	19.16	21.18	22.21	23.15	24.91				0.14	0.51	0.74	1.15
	1600	8.80	9.70	10.57	12.27	13.88	15.71	17.55	19.49	21.50	22.52	23.43	25.11				0.14	0.53	0.77	1.19
	1650	8.98	9.90	10.79	12.51	14.15	16.00	17.86	19.81	21.80	22.80	23.68	25.27				0.15	0.55	0.79	1.22
	1700	9.16	10.09	11.00	12.76	14.42	16.29	18.16	20.11	22.07	23.05	23.90	25.37				0.15	0.56	0.81	1.26
	1750	9.33	10.28	11.21	12.99	14.68	16.56	18.44	20.38	22.33	23.27	24.09	25.44				0.15	0.58	0.84	1.30
	1800	9.50	10.47	11.41	13.22	14.92	16.83	18.71	20.65	22.55	23.46						0.16	0.60	0.86	1.33
	1850	9.67	10.65	11.61	13.44	15.16	17.08	18.97	20.89	22.75	23.63						0.16	0.61	0.88	1.37
	1900	9.83	10.83	11.80	13.66	15.40	17.33	19.21	21.11	22.93	23.76						0.17	0.63	0.91	1.41
	1950	9.99	11.00	11.99	13.87	15.62	17.56	19.44	21.32	23.08	23.86						0.17	0.65	0.93	1.45
	2000	10.14	11.17	12.17	14.07	15.84	17.78	19.66	21.50	23.20	23.93						0.18	0.66	0.96	1.48
15	2050	10.29	11.33	12.34	14.26	16.04	17.99	19.86	21.67	23.30							0.18	0.68	0.98	1.52
	2100	10.44	11.49	12.52	14.45	16.24	18.19	20.04	21.81	23.37							0.18	0.70	1.00	1.56
	2150	10.58	11.65	12.68	14.64	16.43	18.38	20.21	21.94	23.41							0.19	0.71	1.03	1.59
	2200	10.72	11.80	12.84	14.81	16.62	18.56	20.36	22.05	23.42							0.19	0.73	1.05	1.63
	2250	10.85	11.95	13.00	14.98	16.79	18.72	20.50	22.13	23.40							0.20	0.75	1.08	1.67
	2300	10.98	12.09	13.15	15.14	16.95	18.87	20.63	22.19								0.20	0.76	1.10	1.70
	2350	11.11	12.22	13.29	15.30	17.11	19.01	20.73	22.23								0.21	0.78	1.12	1.74
	2400	11.23	12.36	13.43	15.44	17.25	19.14	20.82	22.25								0.21	0.80	1.15	1.78
	2450	11.35	12.48	13.57	15.58	17.39	19.26	20.90	22.25								0.22	0.81	1.17	1.82
	2500	11.47	12.61	13.70	15.72	17.52	19.36	20.96	22.23								0.22	0.83	1.20	1.85
	2550	11.58	12.73	13.82	15.84	17.63	19.45	21.00									0.22	0.85	1.22	1.89
	2600	11.68	12.84	13.94	15.96	17.74	19.53	21.02									0.23	0.86	1.24	1.93
	2650	11.79	12.95	14.05	16.08	17.84	19.60	21.03									0.23	0.88	1.27	1.96
20	2700	11.89	13.05	14.16	16.18	17.93	19.65	21.02									0.24	0.90	1.29	2.00
	2750	11.98	13.15	14.26	16.28	18.01	19.69	20.99									0.24	0.91	1.32	2.04
	2800	12.07	13.25	14.36	16.37	18.08	19.72										0.25	0.93	1.34	2.08
	2850	12.16	13.34	14.45	16.45	18.14	19.73										0.25	0.95	1.36	2.11
	2900	12.24	13.42	14.53	16.52	18.19	19.73										0.26	0.96	1.39	2.15
	2950	12.32	13.50	14.61	16.59	18.23	19.72										0.26	0.98	1.41	2.19
	3000	12.39	13.58	14.68	16.65	18.26	19.69										0.26	0.99	1.43	2.22
	3050	12.46	13.65	14.75	16.70	18.27											0.27	1.01	1.46	2.26
	3100	12.53	13.71	14.81	16.74	18.28											0.27	1.03	1.48	2.30
	3150	12.59	13.77	14.87	16.77	18.28											0.28	1.04	1.51	2.33
	3200	12.65	13.83	14.92	16.80	18.26											0.28	1.06	1.53	2.37
	3250	12.70	13.88	14.96	16.82	18.24											0.29	1.08	1.55	2.41
	3300	12.75	13.92	15.00	16.83												0.29	1.09	1.58	2.45
	3350	12.79	13.96	15.03	16.83												0.29	1.11	1.60	2.48
25	3400	12.83	14.00	15.05	16.82												0.30	1.13	1.63	2.52
	3450	12.87	14.03	15.07	16.81												0.30	1.14	1.65	2.56
	3500	12.90	14.05	15.08	16.78												0.31	1.16	1.67	2.59

Column heads: Pulleys; v [m/s]; n_k [min^{-1}]; Datum diameter of small pulley d_{dk} [mm]; Additional power [kW] per belt for speed ratio i.

v > 30 m/s.
Please consult our Application Engineering Department.

Pulleys: Statically balanced (v up to 30 m/s) / Dynamically balanced (for details see DIN 2211) (v above 30 m/s).

optibelt SUPER TX M=S

The V-flat drive comprises one grooved pulley and one flat pulley. This type of gear can, under certain conditions, be used for drives with intermittent loading or with large moments of inertia. As flywheels or flat pulleys are often already present, the costs of the drive can be reduced. When changing over a flat belt drive to a V-flat drive, it will usually be economical to continue to use the flat pulley.

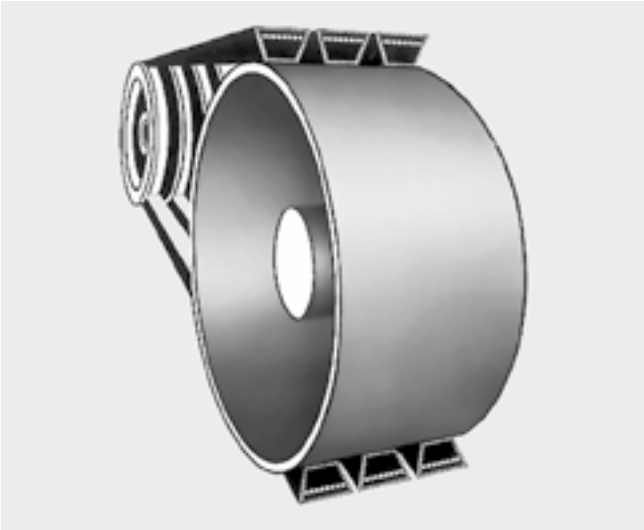

a	=	drive centre distance	[mm]
b	=	face width of the flat pulley	[mm]
b_u	=	bottom width of the belt	[mm]
b_2	=	face width of the grooved pulley	[mm]
D_a	=	outside diameter of the flat pulley	[mm]
D_Z	=	correction factor for determination of the theoretical diameter	[mm]
d_a	=	outside diameter of the grooved pulley	[mm]
d_d	=	datum diameter of the grooved pulley	[mm]
F_l	=	contact area of V-belt and flat pulley	[cm²]
f	=	correction factor for calculating the face width of the flat pulley	[mm]
h	=	height of crown per 100 mm pulley face width	[mm]
i	=	speed ratio	
L_{ath}	=	calculated outside length of the kraftband	[mm]
L_{dth}	=	calculated datum length of the V-belt	[mm]
p_f	=	specific surface pressure	[N/cm²]
P	=	power to be transmitted by the belt drive	[kW]
S_n	=	circumferential force	[N]
α	=	arc of contact on the flat pulley = 360° – β	[°]
kf	=	factor datum length L_d ≙ pitch length L_w	

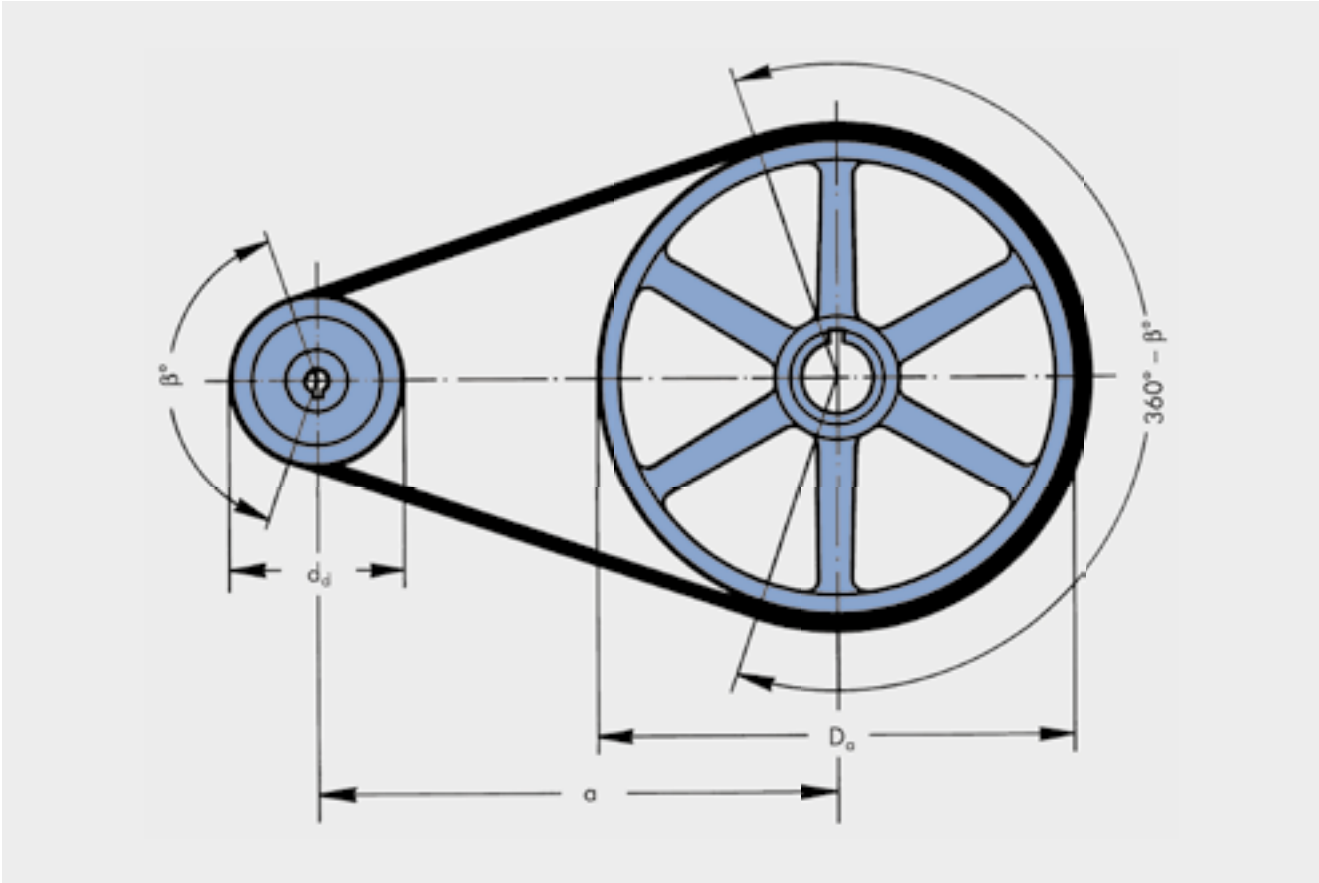

 © ARNTZ OPTIBELT GROUP, GERMANY

Calculating V-flat drives

The calculation of V-flat drives is based on the same method as presented on pages 85 to 87. In order to ensure reliability and efficiency, the V-flat belt drive must meet the following requirements:

- The small pulley must always be V-grooved.
- When using single belts, only classic V-belts in profiles Z/10, A/13, B/17, C/22, D/32, E/40 must be used.
- Wedge belts must never be used as their narrow base and larger relative height tends to make them turn and twist.
- All optibelt KB kraftbands – both with wedge belts and classic V-belts – are particularly suitable for this type of drive due to their single belt characteristic. Turning over even under extreme shock load conditions is prevented.
- A V-flat drive is particularly economic when

$$kf = \frac{D_a - d_d}{a} \text{ is between 0.5 and 1.15}$$

The optimum drive dimensioning is achieved when kf = 0.85. If the factor kf is outside the recommended range, it is more economical to design a standard V-belt drive.

- The following recommendations result from these requirements:

	Classic V-belts	Kraftbands
Speed ratio	$i = \frac{D_a + D_Z}{d_d} \geq 3$	$i = \frac{D_a + D_Z}{d_a} \geq 3$
Centre distance	$a_{zul} \geq D_a$	$a_{zul} \geq D_a$
	$a = \frac{D_a - d_d}{0.85}$	$a = \frac{D_a - d_a}{0.85}$
kf factor	$kf = \frac{D_a - d_d}{a}$	$kf = \frac{D_a - d_a}{a}$
	$0.5 \leq kf_{zul} \leq 1.15$	

- When calculating the number of belts and the belt tension, it should be noted that a special arc of contact factor c_1 must be used as shown in the following table.

Table 69: Arc of contact factor c_1 (only for V-flat drives)

$kf = \frac{D_a - d_d}{a}$	β =	c_1
0	180°	0.75
0.07	176°	0.76
0.15	170°	0.77
0.22	167°	0.79
0.29	163°	0.79
0.35	163°	0.79
0.40	156°	0.81
0.45	153°	0.81
0.50	150°	0.82
0.57	146°	0.83
0.64	143°	0.84
0.70	140°	0.85
0.75	137°	0.85
0.80	134°	0.86
0.85	130°	0.86
0.92	125°	0.84
1.00	120°	0.82
1.07	115°	0.80
1.15	110°	0.78
1.21	106°	0.77
1.30	100°	0.73
1.36	96°	0.72
1.45	90°	0.70

- For classic V-belts, the length is calculated using the datum length L_d, and for kraftbands using the outside length L_a. Therefore, the correction factor D_z must be added to the outside diameter of the flat pulley in order to approximate the theoretical design diameter.

Correction factor D_Z for determination of the theoretical design diameter

Classic V-belts

Profile	Z/10	A/13	B/17	C/22	D/32	E/40
D_Z mm	7	10	13	18	23	25

Kraftbands

Profile	3V/ 9J	5V/ 15J	8V/ 25J	SPZ	SPA	SPB	SPC	A/ HA	B/ HB	C/ HC	D/ HD
D_Z mm	13	23	41	12	15	19	26	12	20	24	35

Calculation of the datum length for classic V-belts

$$L_{dth} \approx 2a + 1.57\,(d_d + D_a + D_Z) + \frac{(D_a + D_Z - d_d)^2}{4\,a}$$

Calculation of the outside length for kraftbands

$$L_{ath} \approx 2a + 1.57\,(d_a + D_a + D_Z) + \frac{(D_a + D_Z - d_a)^2}{4\,a}$$

Length conversion factors are given on pages 169/170.
Datum length L_d ≙ pitch length L_w

- The flat pulley should be shaped cylindrically. With existing flat pulleys that are re-used for the V-flat belt drive, the height of the crown should be checked.

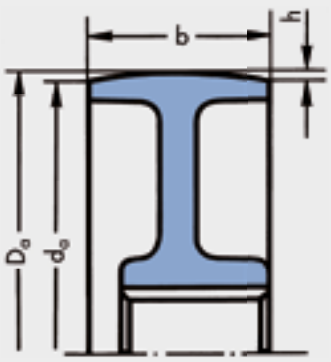

The following conditions must be met:

Maximum crown height

h_{max} = 1 mm per 100 mm pulley face width

$$h = \frac{D_a - d_a}{2} \qquad (h < h_{max})$$

In addition, the pulley face width must be calculated or checked as shown in the following example:

Given/Calculated:

V-grooved pulley	6 grooves
Profile	B/17
Drive centre distance a	850 mm

Solution:
$b = b_2 + f$
$b = 120 + 35 =$ **155 mm**
b_2 for classic V-belts, page 51, table 14.
b_2 for kraftbands, page 55, table 20
f from table 70.
Selected standard flat pulley according to DIN 111 with crown width b = **160 mm**

Table 70: Additional factor f for determining the crown width of the flat pulley

Z/10, SPZ, A/13/HA, 3V/9J		SPB, 5V/15J		C/22/HC, SPC		D/32/HD, 8V/25J		E/40	
a	f	a	f	a	f	a	f	a	f
< 500	20	< 750	25	< 1000	30	< 1250	40	< 1750	45
500-750	25	750-1000	35	1000-1250	40	1250-1750	50	1750-2250	60
> 750	30	> 1000	40	> 1250	50	> 1750	65	> 2250	75

Calculation of the specific surface pressure on the flat pulley

Calculation of the effective belt tension S_n [N]

$$S_n = \frac{P \cdot 1000}{v}$$

Surface pressure on flat pulley p_f [N/cm²]*

$$p_f = \frac{S_n}{F_l}$$

Area of belt contact on flat pulley F_l [cm²]

$$F_l = \frac{D_a \cdot \pi \cdot \alpha \cdot b_u \cdot z}{36000}$$

Recommended surface pressure p_f [N/cm²]*

$p_f \leq 4$ N/cm²*

* 10 N/cm² = 1 Bar = 10^5 Pascal

Formula:

Calculation of the static belt tension for V-flat belt drives T [N]

$$T = \frac{500 \cdot (2.25 - c_1) \cdot P_B}{c_1 \cdot z \cdot v} + k \cdot v^2$$

In addition to the calculation method on pages 85 to 87 the static belt tension for V-flat drives must be calculated according to the formulae given here.

 © ARNTZ OPTIBELT GROUP, GERMANY

SPECIAL DRIVES
PRODUCT DESCRIPTION
optibelt OPTIMAX HF
ENDLESS HIGH PERFORMANCE FLAT BELTS

Structure
The raw material of the optibelt OPTIMAX HF high performance flat belt is polyester yarn. This will be woven to endless sleeves and then covered with a high-quality rubber compound on both sides.

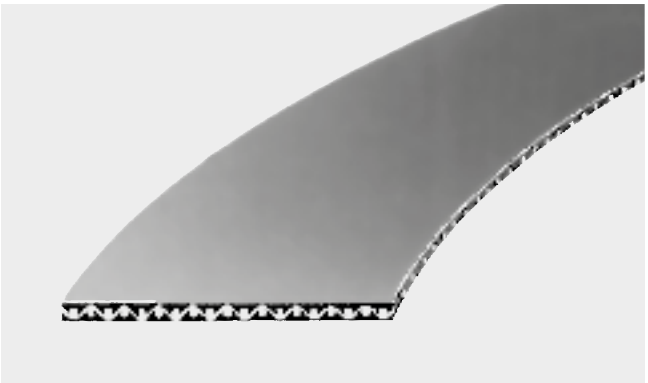

optibelt OPTIMAX HF high performance flat belts are produced in two different types that differ in thickness and strength.
Type HF 150 is intended for general use, whereas type 075 is only intended for special drives.

Characteristics
optibelt OPTIMAX HF are particularly distinguished by the following features:
- High flexibility
- Very small pulley diameters (HF 075 from 6 mm)
- High belt speeds
- High efficiency
- Low noise development and low vibration
- Low maintenance requirement
- Good chemical and ozone resistance
- High friction values (0.5 μ)

A special advantage of this drive element is the low thickness. As a result, very small pulley diameters are possible, which almost always leads to a considerable cost reduction. Due to the use of high-quality synthetic materials, a very high strength is reached despite the low belt thickness.

In addition, the raw materials used guarantee a temperature resistance of –30 °C to +110 °C. With optibelt OPTIMAX HF high performance flat belts, belt speeds of up to 50 m/s are easily possible. No noise and vibrations occur.
Due to its low elongation, this belt can be used even for drives with fixed centre distance for low power transmission systems.
Without engendering the risk of a reduced lifetime, idlers can be used in a flat belt drive. This can be done for tensioning or power reduction.
The high-quality neoprene rubber compound makes optibelt OPTIMAX HF high performance flat belts conditionally resistant to oil, fat, solvent and moisture.
optibelt OPTIMAX HF are electrically conductive; an ISO 1813 certificate can be issued on request.

Application areas
For power transmission, optibelt OPTIMAX HF belts are particularly used in drives with a medium torque or high speeds. Examples of this include: Tool, wood processing, textile, printing, dyeing as well as agricultural machines, etc.
For all the machines listed, we recommend type HF 150, as its low elongation, high strength and sufficient elasticity largely neutralize any impacts and vibrations that occur.
Type HF 075 is especially useful when high precision is required where smooth running and tolerances are concerned. It is therefore used for computers and office equipment as well as small devices.
In addition, the HF 075 can be used for small conveying applications.

Table 71

Type	Thickness [mm]	Thickness tolerance [mm]	Width tolerance [mm]	Minimum pulley diameter [mm]	Weight per metre per 1 mm belt width [g/m]
HF 075	0.5	± 0.15	± 0.5	6	0.7
HF 150	0.9	± 0.15	± 0.5	15	1.12

SPECIAL DRIVES
STANDARD RANGE
optibelt OPTIMAX HF

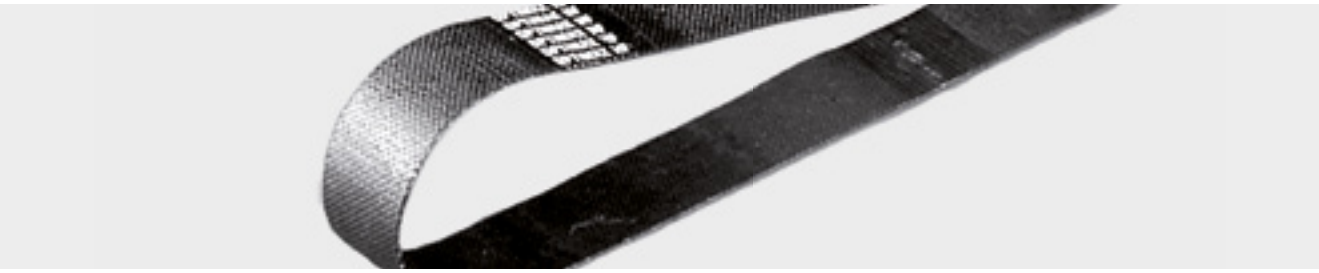

Table 72

Standard range of optibelt OPTIMAX HF TYPE 150 [L_i mm]							
200	690	970	1270	1570	1880	2270	3100
400	695	980	1280	1580	1890	2280	3150
410	700	990	1290	1590	1900	2290	3200
420	710	1000	1300	1600	1920	2300	3250
430	720	1010	1310	1610	1930	2320	3300
440	730	1020	1320	1620	1940	2340	3400
450	740	1030	1330	1630	1950	2350	3500
460	750	1040	1340	1640	1960	2370	3600
470	760	1050	1350	1650	1970	2380	3700
480	770	1060	1360	1660	1980	2400	3790
490	780	1070	1370	1670	2000	2430	
500	790	1080	1380	1680	2020	2440	
510	800	1090	1390	1700	2030	2450	
520	810	1100	1400	1710	2040	2480	
530	820	1110	1410	1720	2050	2500	
540	830	1120	1420	1730	2060	2520	
550	840	1130	1430	1740	2070	2550	
560	850	1140	1440	1750	2090	2570	
570	860	1150	1450	1760	2100	2600	
580	870	1160	1460	1770	2110	2650	
590	880	1170	1470	1780	2120	2660	
600	890	1180	1480	1790	2130	2700	
610	900	1190	1490	1800	2140	2750	
620	910	1200	1500	1810	2150	2780	
630	920	1210	1510	1820	2190	2800	
640	930	1220	1520	1830	2200	2850	
650	935	1230	1530	1840	2210	2900	
660	940	1240	1540	1850	2220	2950	
670	950	1250	1550	1860	2240	3000	
680	960	1260	1560	1870	2250	3050	

Widths
This standard range can be supplied up to a length of 460 mm in any width from 3 to 330 mm.
With a belt length of more than 460 mm, the optibelt OPTIMAX HF is available in any width from 3 to 420 mm.

Non standard lengths
In addition to these standard lengths, any length between 200 and 3850 mm can be delivered on request.

Tolerances
Length tolerance:
- < 600 mm nominal length ± 5 mm
- ≥ 600 mm nominal length ± 0.5 %

Width tolerance:
± 0.5 mm

Delivery options
Type HF 150: The standard range is available from stock.
Type HF 075: Production goods

 © ARNTZ OPTIBELT GROUP, GERMANY

SPECIAL DRIVES
CALCULATION
optibelt OPTIMAX HF
ABBREVIATIONS USED IN FORMULAS

A	=	Length addition value	[mm]
B	=	Width of the flat belt	[mm]
B^*	=	$\frac{\text{Standard width}}{10}$	[mm]
c_o	=	Base drive service factor	
c_1	=	Arc of contact correction factor	
c_2	=	Total drive service factor	
c_4	=	Additional factor	
d_{ag}	=	Outside diameter of large pulley	[mm]
d_{ak}	=	Outside diameter of small pulley	[mm]
d_{a1}	=	Outside diameter of driver pulley	[mm]
d_{a2}	=	Outside diameter of driven pulley	[mm]
e	=	Drive centre distance	[mm]
e_{nom}	=	Centre distance with a standard belt length calculated	[mm]
i	=	Speed ratio	
L_{iSt}	=	Standard inside length of flat belt	[mm]
L_{bth}	=	Calculated inside length of flat belt	[mm]
L^*	=	Measured length after tensioning	[mm]
n_g	=	Speed of large pulley	[rpm]
n_k	=	Speed of small pulley	[rpm]
n_1	=	Speed of driver pulley	[rpm]
n_2	=	Speed of driven pulley	[rpm]
P	=	Power to be transmitted by the belt drive	[kW*]
P_B	=	Design power	[kW*]
P_N	=	Power rating per 10 mm flat belt width	[kW*]
R	=	Elongation factor	
S_a	=	Minimum shaft loading	[N]
v	=	Belt speed	[m/s]
x	=	Minimum allowance above drive centre distance e_{nom} for tensioning and retensioning of the flat belt	[mm]
y	=	Minimum allowance below drive centre distance e_{nom} for installation of the flat belt	[mm]
α	=	Angle of belt run = $90° - \frac{\beta}{2}$	[°]
β	=	Arc of contact on small pulley	[°]

* 1 kW = 1 kNm/s

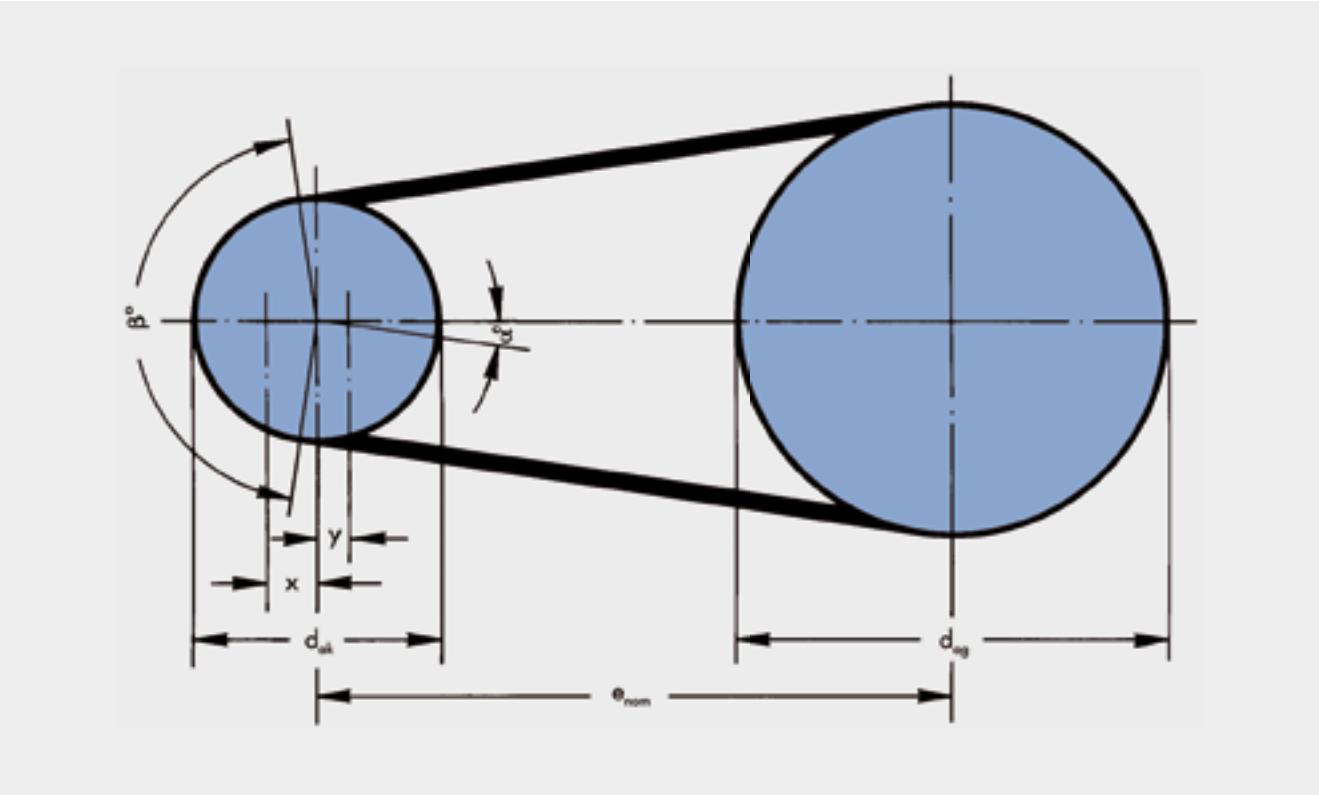

SPECIAL DRIVES
CALCULATION
optibelt OPTIMAX HF
BASE DRIVE SERVICE FACTOR c_o – ARC OF CONTACT CORRECTION FACTOR c_1 – ADDITIONAL FACTOR c_4

Base drive service factor c_0

The base drive service factor c_0 takes into account the type of drive and driven machine. It applies exclusively to two-pulley drives and for a daily operating time of less than ten hours. No special conditions have been taken into account. Please observe the additional factor c_4.
Since it is practically impossible to condense every possible combination of drive unit, driven machine, and operating conditions into a standard-compliant short version, the drive service factors are **guide values**. In special cases, e.g. increased starting torque (direct starting with fans), drives with a high switching frequency, extraordinary impact load, considerable mass acceleration and deceleration, the drive service factor must be increased.
In cases of doubt, we recommend that you contact our consulting engineers.

Table 73

Examples for work machines	Examples for drive machines				
	Small motors	Single-phase and three-phase AC motors with normal starting torque (up to 1.8 times the nominal torque)	Single-phase AC motor with star-delta connection	Single-phase and three-phase AC motors with high starting torque (more than 1.8 times the nominal torque)	Single-phase and three-phase AC motors with high starting torque (more than 1.8 times the nominal torque) and direct starting
Light duty drives Centrifugal pumps, fans, etc.	1.0	1.2	1.3	1.5	1.6
Medium duty drives Textile machines, paper mills, presses, tool machines, wood processing machines, machines in the paper industry, rotating presses, printing machines, lifting tools, oil burners, etc.	1.2	1.4	1.5	1.7	1.8
Heavy duty drives Weaving looms, combing machines in the textile industry, calenders, crushers, cranes, ball mills, piston compressors, agricultural machines, band saws and circular saws, etc.	1.4	1.6	1.7	1.9	2.0

Arc of contact correction factor c_1

The arc of contact correction factor c_1 corrects the power rating P_N when the arc of contact of the belt is smaller than 180°, since the P_N value of the arc of contact β = 180° was determined on the small pulley d_{ak}.

Table 74

$\frac{d_{ag} - d_{ak}}{e_{nom}}$	$\beta \approx$	c_1
0	180°	1.00
0.15	170°	0.94
0.35	160°	0.89
0.50	150°	0.84
0.70	140°	0.78
0.85	130°	0.72
1.00	120°	0.66
1.15	< 120°	0.60

Additional factor c_4

If special conditions need to be taken into account on a drive, the additional factor c_4 is to be added to the base drive service factor c_0.

Table 75

Operating conditions	c_4
Daily operating time ≥ 10 hours	0.20
Strong exposure to dust	0.30
Multi-pulley drive	0.40
Reversing operation	1.00
Fixed centre distance	1.00

 © ARNTZ OPTIBELT GROUP, GERMANY

SPECIAL DRIVES
CALCULATION
optibelt OPTIMAX HF
FORMULAS AND CALCULATION EXAMPLE

Driving machine
Three-phase AC motor with direct starting
$P = 5$ kW
$n_1 = 3000$ rpm

Operating conditions
Starting: under load
Centre distance: selectable between 550 and 600 mm
Pulley diameter: freely selectable
Operating conditions: normal
Operational hours per day: >10 hours

Driven machine
Textile machine
$P = 5$ kW
$n_2 = 5376$ rpm

Formulas	Calculation example
Total drive service factor $c_2 = c_0 + c_4$ c_0 from table 73, page 132 c_4 from table 75, page 132	$c_2 = 1.8 + 0.2 =$ **2,0**
Design power $P_B = P \cdot c_2$	$P_B = 5\text{ kW} \cdot 2.0 =$ **10 kW**
Speed ratio $i = \frac{n_1}{n_2} = \frac{d_{a2}}{d_{a1}}$	$i = \frac{3000\text{ min}^{-1}}{5376\text{ min}^{-1}} =$ **0.56**
Outside diameter of flat belt pulleys d_{a1} = selected from DIN 111 $d_{a2} = d_{a1} \cdot i$ $d_{a1} = \frac{d_{a2}}{i}$	$d_{a1} =$ **224 mm** selected $d_{a2} = 224\text{ mm} \cdot 0.56 = 125.4\text{ mm}$ $d_{a2} =$ **125 mm** selected from DIN 111
Drive centre distance (preliminary) e selectable between 550 and 600 mm	e = **580 mm** preliminary
Inside length of the flat belt $L_{ith} \approx 2e + 1.57\,(d_{ag} + d_{ak}) + \frac{(d_{ag} - d_{ak})^2}{4\,e}$	$L_{ith} \approx 2 \cdot 580 + 1.57 \cdot 349 + \frac{99^2}{4 \cdot 580} \approx 1712$ mm Next standard inside length selected from table 72, page 130 $L_{iSt} =$ **1710 mm**

SPECIAL DRIVES
CALCULATION
optibelt OPTIMAX HF
FORMULAS AND CALCULATION EXAMPLE

Formulas	Calculation example
Drive centre distance Design from L_{iSt} and L_{ith} (if $L_{iSt} > L_{ith}$) $e_{nom} \approx e + \frac{L_{iSt} - L_{ith}}{2}$ (if $L_{iSt} < L_{ith}$) $e_{nom} \approx e - \frac{L_{ith} - L_{iSt}}{2}$	$e_{nom} \approx 580\ mm - \frac{1712\ mm - 1710\ mm}{2} = \mathbf{579\ mm}$
Minimum allowance x/y of the centre distance e_{nom} x = 1.0 % from L_{iSt} y = 0.5 % from L_{iSt}	x = **17.0 mm** y = **8.5 mm**
Speed of the flat belt $v = \frac{d_{ak} \cdot n_k}{19100}$ ($v_{max} \approx 50$ m/s)	$v = \frac{125\ mm \cdot 5376\ min^{-1}}{19100} = \mathbf{35.18\ m/s}$
Arc of contact correction factor and arc of contact $\frac{d_{ag} - d_{ak}}{e_{nom}}$ β approximately and c_1 from table 74, page 132	$\frac{224\ mm - 125\ mm}{579\ mm}$ c_1 = **0.94** β ≈ **170°**
Nominal power per 10 mm flat belt width P_N from table 76, page 135	P_N = **3.18 kW** by linear interpolation
Width of the flat belt $B = \frac{P \cdot c_2 \cdot 10}{P_N \cdot c_1}$	$B = \frac{5\ kW \cdot 2 \cdot 10}{3.18\ kW \cdot 0.94} = 33.5\ mm$ Design: **1 pc. optibelt OPTIMAX HF high performance flat belt HF 150/1710 x 35**
Minimum static shaft loading $S_a \approx 120 \cdot B^*$ $B^* = \frac{\text{Standard width}}{10}$	$S_a \approx 120 \cdot 3.5 \approx$ **420 N**
Determination of the belt tension with length addition value A = L · R (L and R see page 135) L* = L + A	A = 1710 mm · 0.007 = **11.97 mm** L* = 1710 mm + 10 mm = **1720 mm**

 © ARNTZ OPTIBELT GROUP, GERMANY

SPECIAL DRIVES
CALCULATION
optibelt OPTIMAX HF
NOMINAL POWER AND TENSION

Table 76

Belt speed v [m/s]	Transferable power per 10 mm belt width [kW]	
	HF 075	HF 150
2	0.07	0.18
3	0.12	0.22
4	0.18	0.37
5	0.22	0.46
6	0.27	0.56
7	0.31	0.65
8	0.36	0.75
9	0.40	0.82
10	0.45	0.89
11	0.49	0.93
12	0.53	1.11
13	0.57	1.21
14	0.61	1.31
15	0.64	1.41
16	0.68	1.51
17	0.72	1.57
18	0.76	1.63
19	0.79	1.69
20	0.83	1.75
21	0.86	1.82
22	0.89	1.89
23	0.91	1.99
24	0.94	2.09
25	0.96	2.19
26	0.99	2.28
27	1.00	2.39
28	1.02	2.50
29	1.03	2.60
30	1.05	2.70
31	1.06	2.81
32	1.07	2.91
33	1.07	3.01
34	1.08	3.11
35	1.08	3.18
36	1.08	3.25
37	1.07	3.33
38	1.06	3.40
39	1.05	3.48
40	1.03	3.55
41	1.02	3.58
42	1.00	3.60
43	0.98	3.63
44	0.95	3.65
45	0.93	3.66
46	0.90	3.70
47	0.85	3.73
48	0.80	3.75
49	0.75	3.78
50	0.70	3.80

Tension of flat belts

The correct level of belt tension is of enormous importance for trouble-free transmission of power and for achieving an acceptable belt service life.
Often tension which is either too high or too low results in early belt failure. A belt which is over tensioned often causes bearing failure in the drive or driven machine.
It has been shown that common tensioning instructions, such as using the "thumb pressure deflection method", are not suitable for obtaining optimum tension for operating at full efficiency.
Over or undertensioning of the drive can be avoided if the tension is calculated, set or checked according to the following method.

Tension through span force

An optimum tension is achieved if a span force of 300 N per 10 mm belt width is applied for type HF 150.
This belt tension approximately corresponds to an elongation of 0.7 % of the belt length.
Type HF 075 can be tensioned according to the same method, with the exception that the span force is 150 N per 10 mm belt width and an elongation of 0.8 % of the belt length can be expected.
The span force can easily be checked on a belt width of up to 50 mm with the aid of optibelt TT using the frequency measuring method. If the frequency has been determined, the span force can be calculated as follows:
$T = 4 \cdot k \cdot L^2 \cdot f^2$.
T = Belt tension [kN]
k = Weight per metre per mm belt width [g/m]
L = Belt tension [m]
f = Frequency [Hz]

Checking the tension with a length addition value

The length (L) of the relevant flat belt is measured in an untensioned condition on the top surface of the belt.
Calculate the length addition value "A" by using the formula:
A = L · R (elongation value)
R = 0.007 for type HF 150
R = 0.008 for type HF 075

This length addition value A should then be added to the measured length.
The flat belts are now tensioned until the calculated length is reached (length + length addition value A). The belt is then correctly tensioned.
If the drive is to be retensioned, the belt must first be slackened off so that it can be measured in a tension-free state.

After that, follow the procedure described above.

A	= Length addition value	[mm]
L	= Length of flat belt	[mm]
L*	= Measured length after tensioning	[mm]
R	= Elongation factor	[mm]

SPECIAL DRIVES
optibelt OPTIMAX HF
FLAT BELT PULLEYS
STANDARDS – SELECTION CRITERIA – TYPES

Curved

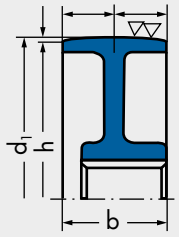

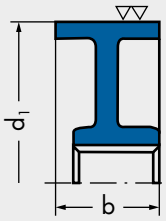

Cylindrical

Flat belt pulleys are an essential part of the flat belt drive. They are mainly manufactured of GG 20 cast iron according to DIN 1691 and supplied with a pilot hole, pre-fabricated hole or with a clamping bush system. Other materials, such as steel or aluminium can also be used depending on the drive conditions.
When selecting the flat belt pulleys, the following must be adhered to:

- Use standardized pulley diameters. If this is not possible for structural reasons, a standardized diameter should be selected for the largest pulley.
- Do not use less than the minimum pulley diameter in the interest of the belt lifetime and the efficiency of the drive.

Minimum pulley diameter
Type HF 075 = 6 mm
Type HF 150 = 15 mm

- If users produce their own flat belt pulleys, a standard-compliant design and finish must be ensured (DIN 111).
- Flat belt pulleys are generally balanced on a level (statically), quality grade G 16, according to VDI 2060.
- Balancing on two levels (dynamically), quality grade G 6.3, becomes necessary if:
  1. v > 30 m/s or
  2. The ratio of diameter to pulley face width is d : b < 4 with v > 20 m/s.
- Flanged pulleys should be avoided if possible.

Pulley face widths
When selecting flat belt pulleys, a suitable width must be ensured. The following rule applies: Belt width plus 10 %.

Pulley type
The flat belt pulley should be of cylindrical or curved design. When using curved pulleys, the crown height specified in DIN 111 must be observed (also see tables).

Table 77

Diameter d_1 [mm] Nominal size	Permissible deviation	Crown height h [mm]	Run out tolerance t [mm]
40	± 0.5	0.3	0.2
50	± 0.6		
63	± 0.8		
71	± 1	0.3	
80			
90	± 1.2	0.3	
100			
112	± 1.2	0.3	0.3
125	± 1.6	0.4	
140			
160	± 2	0.5	
180	± 2	0.5	0.4
200		0.6	
224	± 2.5	0.6	
250		0.8	
280	± 3.2	0.8	0.5
315		1	
355			

In the case of diameters < 400 mm, the crown height does not depend on the pulley face width (DIN 111).

Table 78

Diameter d_1 [mm] Nominal size	Perm. dev.	Crown height h [mm] (depending on the face width)							Run out tolerance t [mm]
400	± 4	1	1.2	1.2	1.2	1.2	1.2	1.2	0.5
450									0.6
500			1.5	1.5	1.5	1.5	1.5	1.5	0.6
560	± 5	1	1.5	1.5	1.5	1.5	1.5	1.5	0.6
630				2	2	2	2	2	
710									0.8
800	± 6.3	1	1.5	2	2.5	2.5	2.5	2.5	0.8
900									
1000						3	3	3	
1120	± 8	1.2	1.5	2	2.5	3	3	3.5	1
1250							3.5	4	
1400		1.5	2	2.5	3	3.5	4	4	
1600	± 10	1.5	2	2.5	3	3.5	4	5	1
1800		2	2.5	3	3.5	4	5	5	1.2
2000								6	
Pulley face width b [mm]		≤125	140 160	180 200	224 250	280 315	355	≤400	

 © ARNTZ OPTIBELT GROUP, GERMANY

Idlers are grooved or flat pulleys that do not transmit any power in a drive system. Due to the fact that additional flexing stress is created in the belt, it is recommended that idlers are only used sparingly under the following conditions if possible:

- with fixed drive centres in order to produce the required tension and to take up the maximum possible belt stretch and wear,
- as an idler pulley when dealing with extremely long free belt spans that are subject to twisting,
- as outside idlers where the arc of contact on one of the loaded pulleys is too low. Their inclusion increases the arc of contact and often reduces excessive slip or eliminates the need to increase the number of belts,
- as idler pulleys and guide idlers on drives where pulleys are not all on the same plane such as quarter turn drives,
- to guide belts past obstructions,
- as pneumatically, hydraulically or spring loaded idlers to maintain a constant tension,
- as clutching idlers with which the driven pulley can be engaged or disengaged. Complex clutches are no longer required. Because of their single belt characteristics, optibelt KB kraftbands are particularly suited for these applications.

If, for the reasons listed above, it is absolutely essential to employ idlers, the following criteria should be considered when designing the drive:

- idler configuration
- position of the idler in the belt span
- idler diameter
- idler design
- adjustment allowance of the idler for installation and initial and subsequent tensioning of the belt
- correction of the power rating P_N

Idler configuration

In principle, idlers can be used as inside or outside idlers depending on the drive situation.
Unless design requirements call for an outside idler, the inside idler is usually more advantageous. Its diameter can be kept smaller than that of the outside idler.

Depending on the belt type, **inside idlers** can either be grooved or flat pulleys.

Table 79: Profile dimensions

Belt type	V-grooved pulley	Flat pulley
High performance wedge belts DIN 7753 Part 1 SPZ; SPA; SPB; SPC	•	
High performance wedge belts ARPM/MPTA 3V/9N; 5V/15N; 8V/25N	•	
Classic V-belts DIN 2215 Z/10; A/13; B/17; 20; C/22; 25; D/32; E/40	•	•
Kraftbands with high performance wedge belts 3V/9J; 5V/15J; 8V/25J; SPA; SPZ; SPB; SPC	•	•
Kraftbands with classic V-belts A/HA; B/HB; C/HC; D/HD	•	•

For raw edge V-belts and kraftbands the same requirements as given in table 79 apply.

Inside idlers reduce the arc of contact on the loaded pulleys and with it the arc of contact correction factor c_1. When calculating the number of belts, the arc of contact correction factor should be selected for the position of the idler at the point of maximum belt stretch (see table 81, page 139).

Outside idlers generally have to be flat pulleys as they are running on the back of the belt. They increase the arc of contact. Care must be taken to ensure that the maximum possible belt stretch is taken up and that contact with the opposite span is prevented. The reverse bending caused by outside idlers will lead to a reduction of the belt service life.

Special V-belt constructions on request.

Position of the idler in the belt span

Theoretical power transmission formulas and actual practice have shown that idlers should, wherever possible, be placed in the slack side of the drive. The tension idler force can be reduced very significantly then. A spring loaded idler must not be employed in a reversing drive as the slack and tight sides of the drive are constantly changing.
Our Application Engineering Department will be pleased to assist you when spring loaded idlers present special problems.

Fig. 1

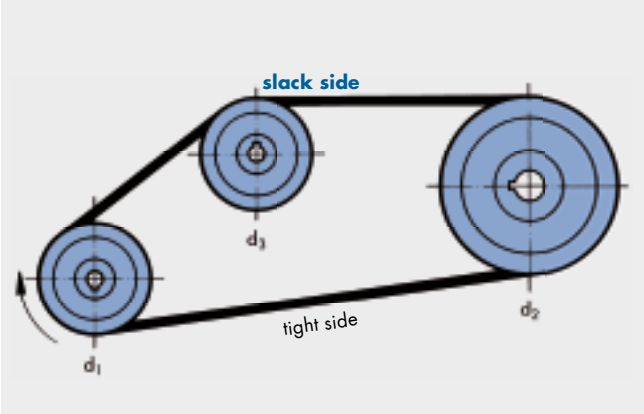

Grooved pulleys can be used as inside idlers anywhere on the slack side. Where possible, however, the arc of contact should be the same on both pulleys when the idler reaches its end position, i.e. belt stretch is at its maximum.

Fig. 2

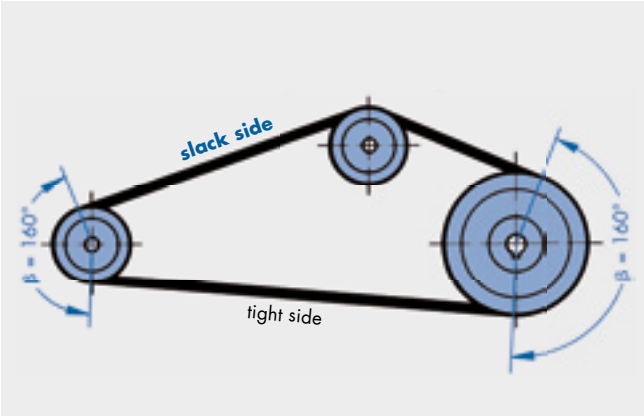

Flat pulleys, whether used as inside or outside idlers, are to be placed as far as possible away from the grooved pulley on to which the belt runs next. Any alignment errors between the idler and the pulley and the resultant sideways movement of the belt on the pulley are thus avoided.

Fig. 3

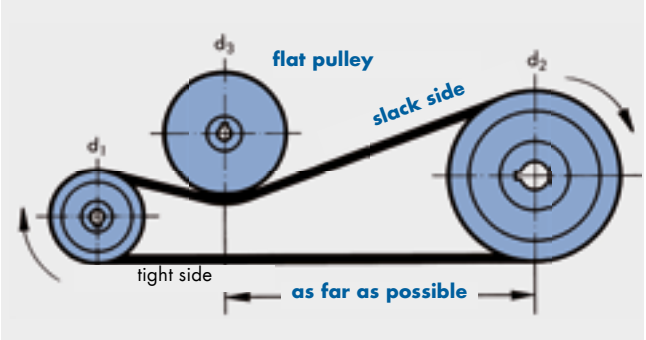

On drives with long belt spans, grooved pulleys are the preferred choice for inside idlers because with flat pulleys transverse vibrations and belt turnover can occur.

Minimum diameter for idlers

Inside idlers should not be smaller than the recommended minimum pulley diameter ($d_{d\ min}$) for the belt section concerned (see page 51, table 14)

Inside idler ≥ minimum pulley diameter for the belt section concerned

The presence of an outside idler exposes the belt additionally to a varying bending load. Due to this load, outside idlers must be at least 1.35 times greater than the minimum pulley diameter for the particular belt section.

Outside idler ≥ 1.35 · min. pulley diameter for the belt section concerned

The belt service life is significantly reduced if the minimum recommended idler diameter is less than the recommended size. The use of an Optibelt special construction can significantly improve service life.

Idler design

Grooved pulleys which are used as idlers can usually have standard groove dimensions. On drives with too severe vibration and long drive centre distances, it is recommended that deep grooved pulleys are used.
Flat pulleys should, if possible, be cylindrical and not crowned. Flanged pulleys are recommended as belt guides. The edges formed by the contact surface and pulley flange should be sharp. Round edges encourage the belt to run on the flanges causing it to turn over.

 © ARNTZ OPTIBELT GROUP, GERMANY

The face width or the contact surface between the two flanges is calculated as follows:

$$b = b_2 + m$$

b = face width/contact surface [mm]

b_2 = face width of the grooved pulley [mm]

m = additional value [mm]

Profile	Additional value m [mm]
SPZ, 3V/9N, Z/10	15
SPA, A/13	20
SPB, 5V/15N, B/17	25
SPC, C/22	30
8V/25N	35
D/32	40
E/40	45

This also applies to raw edge V-belts

Drive calculation

Calculating the length and determining the number of belts is basically the same as for 2-pulley drives. Certain details are, however, to be noted:

1. Calculate the belt length over two pulleys using the formula: see notes on standards page 180.

$$L_{dth} \approx 2a + 1.57\,(d_{dg} + d_{dk}) + \frac{(d_{dg} - d_{dk})^2}{4a}$$

2. As the belt has to be fitted without force with fixed centre distances, the double adjustment **y** must be added to the belt length L_{dth} (see pages 82/83).

$$L_d = L_{dth} + 2\,y$$

3. The next largest standard length L_{dSt} should then be selected. A check should be made, usually on the drawing, to determine whether the belt can be adequately tensioned with the idler in the outermost position. In this idler position, both the standard length L_{dSt} and the double adjustment **x** must be taken up (see pages 82/83).

$$L_d \text{ for idler end position} = L_{dSt} + 2\,x$$

Fig. 4

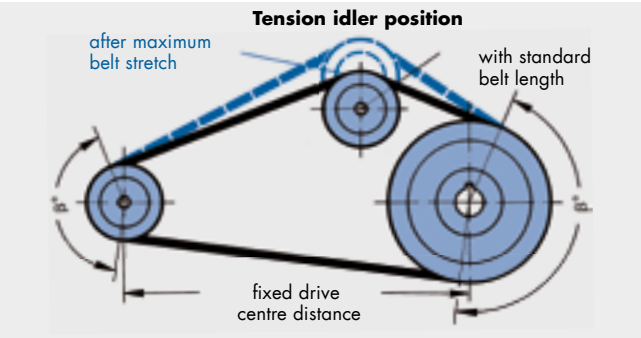

Number of belts

The use of idlers increases the bending stress in the belts. To avoid a reduction in belt service life, the idler correction factor c_4 must also be included in the calculation. This correction factor takes into account the number of idlers that are larger than the minimum diameter.

Table 80

Number of idlers	c_4
0	1.00
1	0.91
2	0.86
3	0.81

The nominal power rating P_N per belt is, as before, based on the smallest loaded pulley.
Calculation of the arc of contact correction factor c_1 must be based on the smallest contact angle of the loaded pulley which occurs when the belt is stretched to its maximum limit.

Table 81: Arc of contact correction factor c_1

β =	c_1	β =	c_1
75°	0.82	175°	1.00
80°	0.84	180°	1.00
85°	0.86	185°	1.00
90°	0.88	190°	1.00
95°	0.90	195°	1.01
100°	0.91	200°	1.01
105°	0.92	205°	1.01
110°	0.93	210°	1.01
115°	0.94	215°	1.01
120°	0.95	220°	1.01
125°	0.96	225°	1.01
130°	0.96	230°	1.01
135°	0.97	240°	1.02
140°	0.97	250°	1.02
145°	0.98		
150°	0.98		
155°	0.99		
160°	0.99		
165°	0.99		
170°	1.00		

The following formula for determining the number of belts is obtained using the idler correction factor c_4:

$$z = \frac{P \cdot c_2}{P_N \cdot c_1 \cdot c_3 \cdot c_4}$$

SPECIAL DRIVES
TWIST DRIVES

Drives with crossing belt spans are often simply termed twist drives. These can be drives where the shafts are not parallel, whose pulleys and idlers are not all arranged on one plane, or drives with two parallel but counter rotating shafts. Because of the twisting of the belt, this type of drive requires a certain degree of lateral bending flexibility. Due to the cross section of V-belts, flat belts are better suited for this application. In most cases twist drives use single V-belts, but drives using belt sets are also possible. The crossing of the belt spans and the non-aligned entry of the belt into the pulley leads to a reduction of the belt service life. The entry and exit angle between the belt and the pulley plane should not be more than 5°.

The required inclination of the shafts and the pulleys relative to each other and the belt entry and exit angles should be confirmed by practical tests. In addition, certain critical drives may have a considerably improved safety factor if special constructions by Optibelt are used. The most important types of twist drives and the according design guidelines are illustrated below.

Quarter twist drive

The term quarter twist drive is used to describe systems where the shafts are at an angle of 90° to each other. The ratio i or 1 : i of quarter twist drives should not exceed 2.5.

Where this is not possible, a two stage drive should be employed, in which one stage is a standard V-belt drive.

Quarter twist drive – ratio i or 1 : i < 2.5

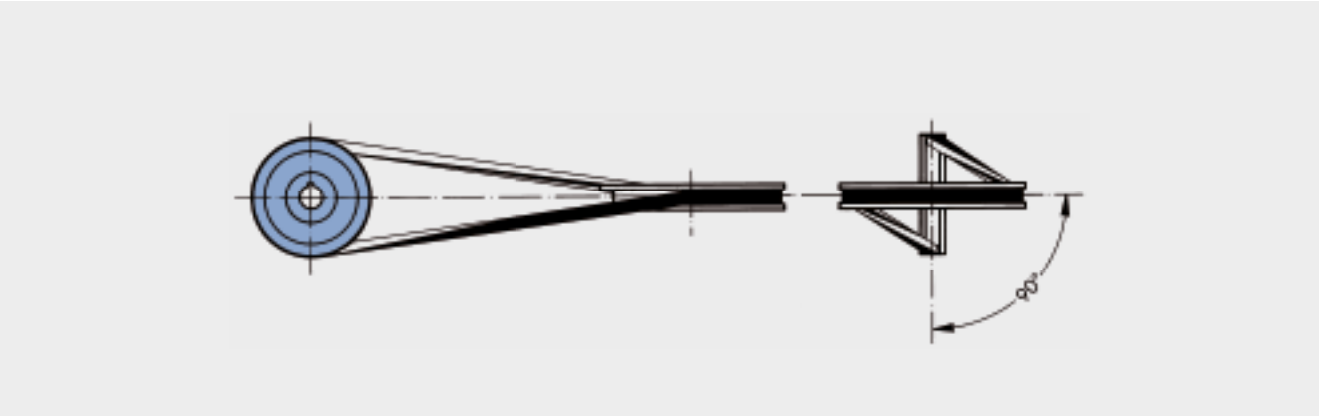

Quarter twist drive – ratio i or 1 : i > 2.5

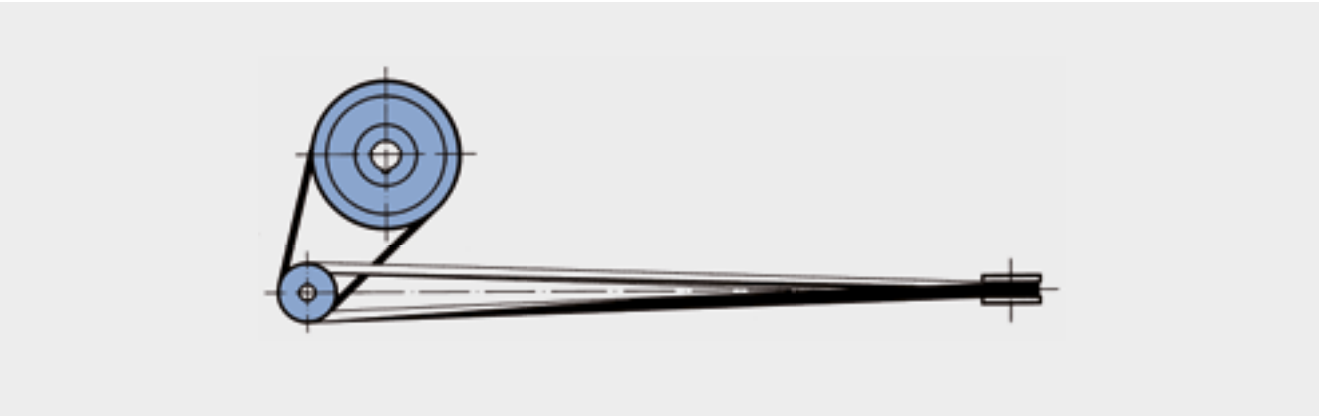

 © ARNTZ OPTIBELT GROUP, GERMANY

Design guidelines for quarter twist drives

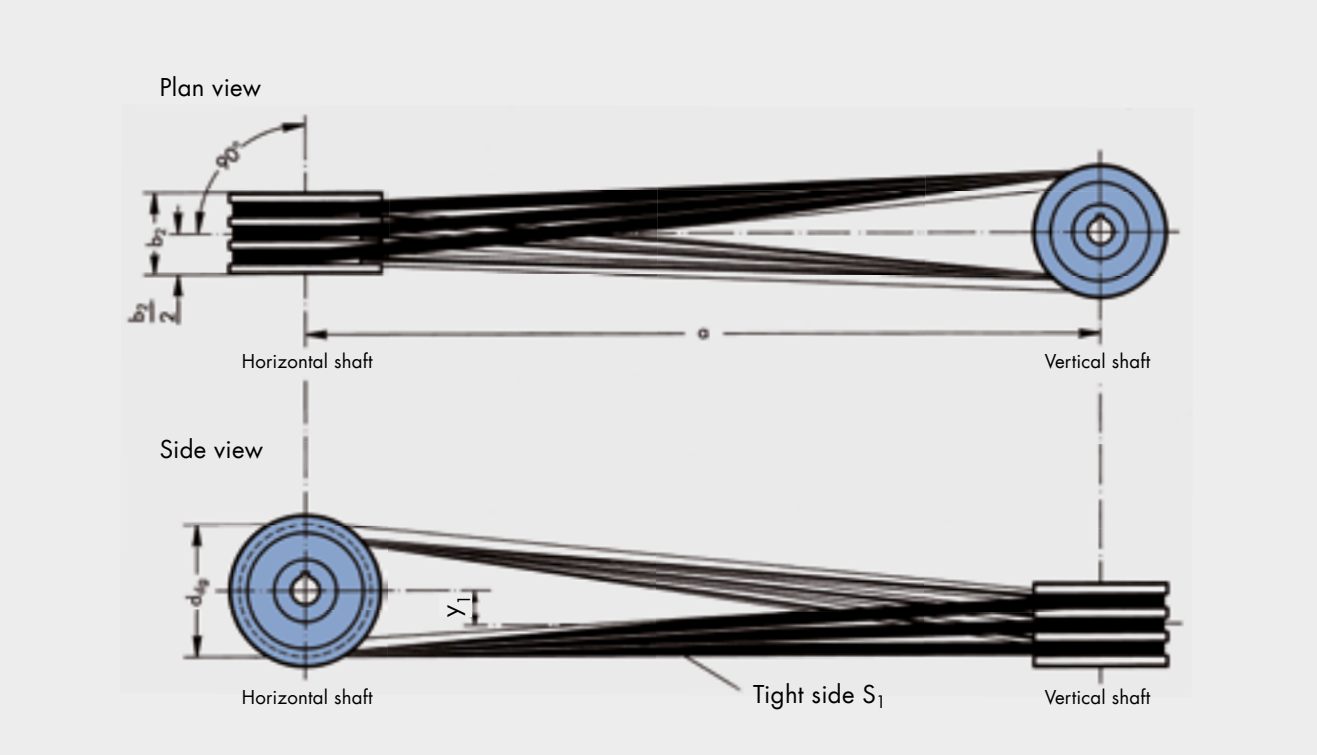

1. $a_{min} = 5.5\ (d_{dg} + b_2)$

2. The drive must be aligned in such a way that a straight line drawn through the centre of the vertical shaft runs through the centre of the face b_2 of the pulley on the horizontal shaft (plan view). The horizontal shaft must be at right angles to this straight line.

3. The horizontal centre line of the pulley on the horizontal shaft must be above and at a distance y_1 from the centre line of the pulley on the vertical shaft (side view). The distance y_1 changes with the centre distance "a".

Table 82

Drive centre distance a [mm]	y_1 [mm] Classic V-belts	y_1 [mm] Wedge belts
1200 ≤ 1500	5	–
> 1500 ≤ 2000	8	5
> 2000 ≤ 2500	12	8
> 2500 ≤ 3000	17	10
> 3000 ≤ 3500	25	15
> 3500 ≤ 4000	35	25
> 4000 ≤ 4500	45	30
> 4500 ≤ 5000	55	40
> 5000 ≤ 5500	65	45
> 5500 ≤ 6000	80	55
> 6000	100	65

4. The direction of rotation must be arranged so that the tight side S_1 is at the bottom.

5. Deep grooved pulleys should be specified if possible for single belt drives. This ensures an improved entry and exit of the belt, thus preventing turnover.

6. Never specify deep grooved pulleys when using kraftbands. Kraftband pulleys should always be used. We recommend, in any case, consulting our Application Engineering Department.

7. When calculating the number of belts, the examples given on pages 85 to 87 should be followed. An arc of contact correction factor $c_1 = 1$ must always be used.

8. The static belt tension "T" should be calculated using the formula on page 128.

9. The drive or work machine must be adjustable so that the belt can be fitted without force, the necessary tension can be applied and the belt stretch and wear can be taken up during its service life.

Eighth twist drives
Eighth twist drives are seldom necessary. The shafts in this drive system are at an angle of 45° to each other.

Design guidelines

1. $a_{min} = 4\ (d_{dg} + b_2)$
2. Otherwise the design guidelines for quarter twist drives are applicable.

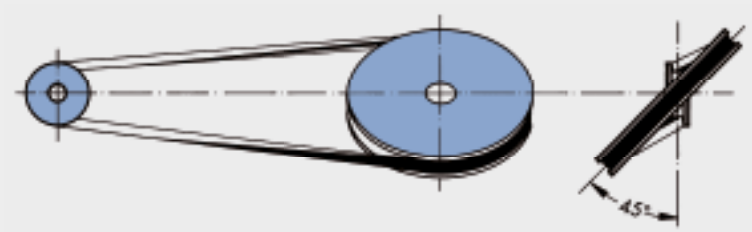

Drives with 180° twist
The driver and the driven shafts are, as with conventional drives, parallel to each other. The belt is twisted 180° so that both spans cross. A change in direction is thus achieved at very little cost.

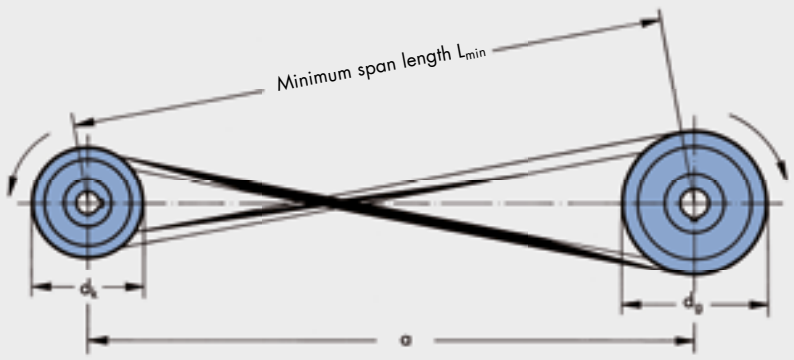

Design guidelines
1. In order to enable a perfect running of the belts in the pulley grooves, the belt span length must not be less than the minimum given in the following table.

Table 83

Profile	Minimum span length L_{min} [mm]
SPZ, 3V/9N	350
SPA	400
SPB, 5V/15N	450
SPC	600
8V/25N	700
A/13	460
B/17	560
C/22	720
D/32	940
E/40	1150

2. If possible, the crossover point of both belt spans should be arranged in the centre of the drive. The rubbing of the belt spans against each other is at a minimum at this point. In order to avoid contact completely, it is recommended that a guide pulley is placed in the slack side S_2 near the crossover point.
3. Length calculation

$$L \approx 2a + 1.57\ (d_g + d_k) + \frac{(d_g + d_k)^2}{4\ a}$$

4. Otherwise, the design guidelines as described in points 4 to 9 for quarter twist drives apply.

◀ These values also apply for raw edge belts.

 © ARNTZ OPTIBELT GROUP, GERMANY

SPECIAL DRIVES
DRIVE ELEMENTS WITH ARAMID STRUCTURES

Aramid is an organic polyamide fibre that is manufactured in a complex chemical process. It may be used wherever maximum stress resistance and reliability are required. The processing of this fibre requires the highest level of experience and know-how as well as sophisticated testing facilities. Aramid is used as the tension cord material for highly loaded V-belts and kraftbands.

Structure and properties
Compared to materials commonly used for tension cords e.g. polyesters, aramid stands out due to its extremely low-stretch properties.
Its tensile strength is twice as high as that of a standard fibre in the same thickness.

	Tensile strength [cN/tex]	Stretching at break [%]	Tension at 2 % [cN/tex]
Polyester	81	14	15
Aramid	190	4	73

cN = Centi-Newton Thread weight: 1 tex = 1 g/1000 m

Despite its extreme strength, this fibre is remarkably flexible and has sufficient elasticity to absorb shock loads or vibration.

These properties, which are of special importance for V-belts and kraftbands, result in huge improvements in comparison to conventional constructions.

Optibelt V-belts in aramid cord structure comprise:

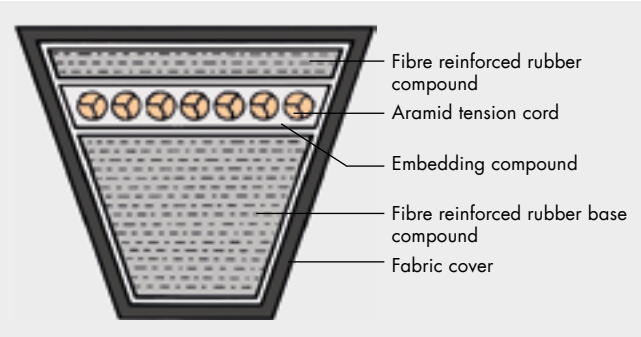

The high quality, specially processed aramid tension cord is embedded in a special rubber compound. The upper and substructure are thus supported effectively. These consist of a fibre reinforced polychloroprene rubber compound. The cover fabric is treated with a rubber compound on both sides and covers the whole belt.

Applications areas
The advantages of Optibelt V-belts and kraftbands with aramid tension cords are best applicable where

- high power transmission is required
- there is only small installation space
- there is little adjustment range
- high temperature influences occur

Thus, with the same number of belts and unchanged drive parameters, significantly higher power levels can be transmitted without reducing the service life of the belts. Even drive constructions that have previously had to be classified as critical may now be considered risk free. From now on, load limits apply as safety buffer zones; minimal belt stretch results in virtually maintenance-free running.

For these reasons Optibelt V-belts and kraftbands with aramid tension cord are to be found on drives with exceptional loading requirements –

- on critical drives in industrial applications
- on special machines
- on agricultural machinery
- on horticultural machinery

Attention: With two-pulley drives, particular requirements are placed on the shafts and bearings. It is recommended to use spring-loaded idlers (inside/outside idlers) with aramid V-belts / aramid kraftbands.
A discussion of all the relevant criteria would be beyond the scope of this manual. We therefore recommend contacting our Application Engineering Department to discuss your special requirements.

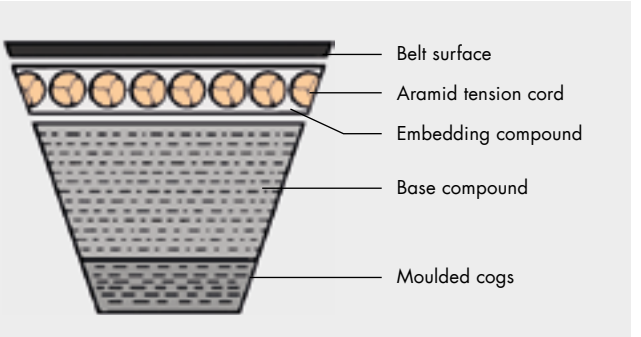

Special applications can also be designed with raw edge V-belts and kraftbands employing aramid tension cords.

Drive calculation
Calculation should follow the example given on pages 85 to 87.

Please ask for the higher power ratings.

Diagram 6

Time-stretch diagram dimensions SPB 2000 L_d

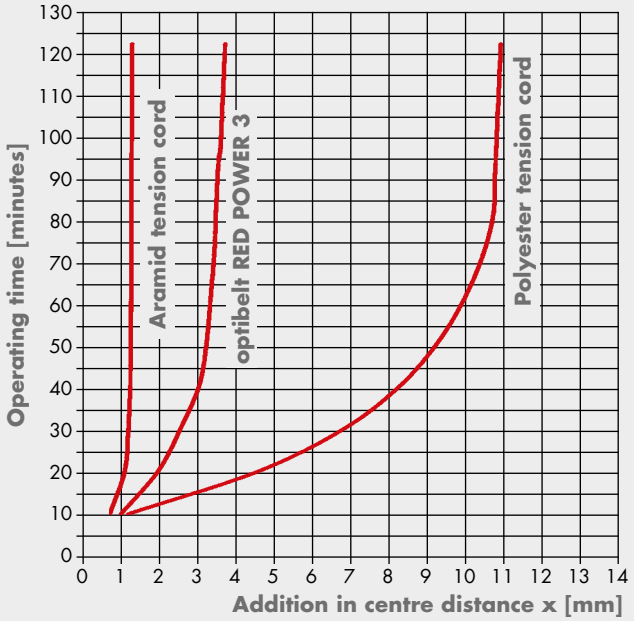

Test arrangement centre distance increase [mm]

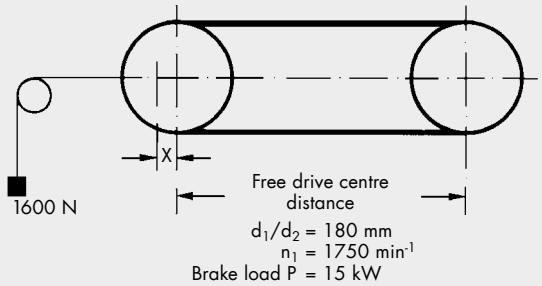

The time-dependant increase in operational stretch (centre distance increase) with three drive constructions will be documented here. Polyester belts require further re-tensioning (see "Design support").

Diagram 7

Power rating diagram belt size 8V 2000 L_d

Datum diameter of the small pulley d_{ak} = 450 mm

Speed ratio i > 1.57

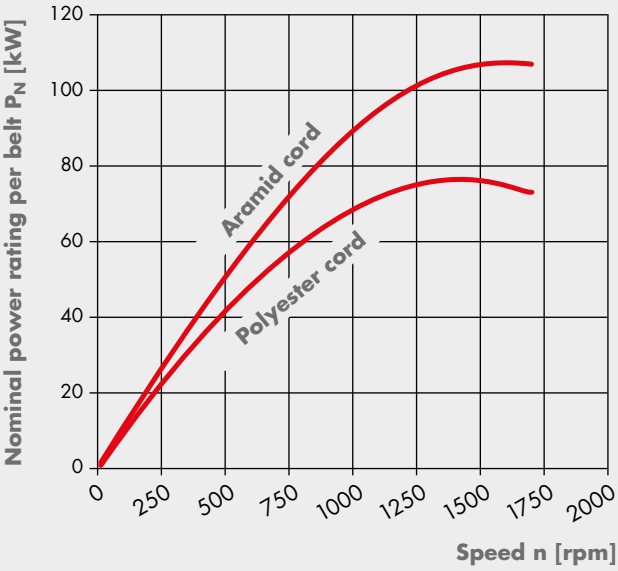

This diagram shows the significantly higher power rating of the Optibelt V-belts with aramid cord in direct comparison to polyester cord belts.

Profiles/Lengths

Raw edge and wrapped Optibelt V-belts and kraftbands are available with aramid to DIN/ISO and ARPM/MPTA. Lengths and minimum order quantities on request.

Special information:

Aramid belts are to be ordered in sets.
V-belts/kraftbands are to be ordered in sets.

Profile	Length		Range
V-belts			As per the Optibelt standard range
SPZ	≥ 1000 L_w	≤ 3550 L_w	
SPA	≥ 1000 L_w	≤ 4500 L_w	
SPB	≥ 1250 L_w	≤ 8000 L_w	
SPC	≥ 2000 L_w	≤ 12500 L_w	
3V/9N	≥ 3V 400 / 9N 1016 L_a	≤ 3V 1400 / 9N 3556 L_a	
5V/15N	≥ 5V 500 / 15N 1270 L_a	≤ 5V 3550 / 15N 9017 L_a	
8V/25N	≥ 8V 1000 / 25N 2540 L_a	≤ 8V 5000 / 25N 12700 L_a	
Kraftbands			
3V/9J	≥ 3V 500 / 9J 1270 L_a	≤ 3V 1400 / 9J 3556 L_a	
5V/15J	≥ 5V 500 / 15J 1270 L_a	≤ 5V 3550 / 15J 9017 L_a	
8V/25J	≥ 8V 1000 / 25J 2540 L_a	≤ 8V 4750 / 25J 12065 L_a	
Further profiles and length ranges as well as minimum order quantities on request.			

Datum length L_d ≙ pitch length L_w; outside length = L_a

 © ARNTZ OPTIBELT GROUP, GERMANY

DESIGN SUPPORT
BELT TENSION FOR OPTIBELT V-BELTS

For proper power transmission and for achieving an acceptable belt service life, the correct belt tension is of the utmost importance.
Too low or too high belt tension will lead to the premature failure of the belts. Over tensioning often leads to bearing failure on the driver or the driven machine. Experience has shown that unscientific belt tensioning methods, such as the "thumb pressure method", are not suitable for applying the optimum tension to the drive for maximum efficiency. It is therefore recommended that for each drive the required static belt tension "T" is calculated using the formulas by Optibelt. This tension is the lowest possible required by a drive to transmit the highest power level from the drive, taking account of the normal amount of slip.
Once the belt has been fitted and the initial tension has been applied, it should be checked using an Optibelt tension gauge.
The belt should be monitored regularly during the first hours of operation. Experience has shown that the first re-tensioning should be carried out after approximately 30 minutes to four hours operating under full load. In doing so, the initial stretch is absorbed.
After approximately 24 hours of operation, it is often recommended to check the drive and re-tension the belts if necessary, particularly when not continuously run under full load. The time between checks can be significantly increased then. Also see our installation and maintenance advice on pages 158 to 159.
Too high or too low tension of the drive will be avoided if the belt tension is calculated, set and checked using one of the following methods.

I. Checking the belt tension by span deflection

This method provides an indirect measurement of the calculated or actual static belt tension. It is applicable for belt sections SPZ, SPA, SPB, SPC, 3V/9N, 5V/15N, Z/10, A/13, B/17, 20, C/22, 25, D/32, XPZ, XPA, XPB, XPC, 3VX, 5VX, ZX/X10, AX/X13, BX/X17, CX/X22.

E	=	belt deflection per 100 mm span length	[mm]
E_a	=	belt deflection for a given span length	[mm]
f	=	load used to set belt tension	[N]
k	=	constant for calculation of centrifugal force	
L	=	drive span length	[mm]
S_a	=	minimum static shaft load	[N]
T	=	minimum static tension per belt	[N]

1. Calculation of the static belt tension using the following formula:

$$T \approx \frac{500 \cdot (2.04 - c_1) \cdot P_B}{c_1 \cdot z \cdot v} + k \cdot v^2$$

During new installation, the drive is to be tensioned with 1.3 T.

2. Determine the belt deflection per 100 mm span length E from the belt tension/deflection diagrams 8 to 11.

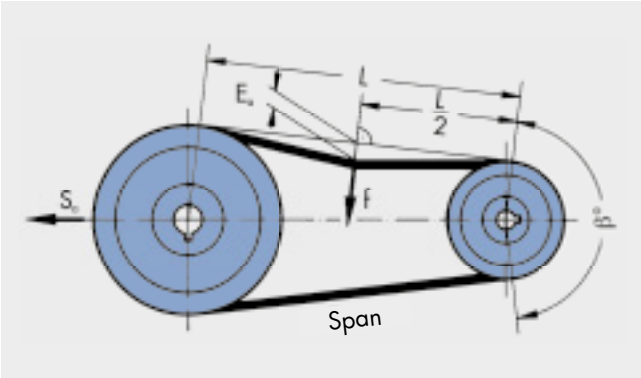

3. Calculate the belt deflection for a given span length E_a for the actual drive span length L.

$$E_a \approx \frac{E \cdot L}{100}$$

$$L = a_{nom} \cdot \sin\frac{\beta}{2}$$

Apply test load "f" (taken from diagrams 8 to 11 for the appropriate belt profile) to the centre of, and perpendicular to, the span as illustrated above. Measure the deflection and if necessary adjust the centres until the correct belt tension is achieved.

II. Checking the belt tension via speed measurement

This method checks belt tension using the theoretical slip. The speed of the driver and driven pulleys are measured first in an unloaded condition and then under load.

S	=	slip	[%]
n_{1L}	=	driver pulley speed, no load	[rpm]
n_{2L}	=	driven pulley speed, no load	[rpm]
n_{1B}	=	driver pulley speed, under load	[rpm]
n_{2B}	=	driven pulley speed, under load	[rpm]

Formula for calculating the slip:

$$S = \left(1 - \frac{n_{1L}/n_{2L}}{n_{1B}/n_{2B}}\right) \cdot 100$$

At the rated loading, the slip should not exceed 1 %. The belt service life is considerably shortened due to incorrectly low tension or overloading with a slip of over 2 %.

Diagram 8: Belt tension characteristics for optibelt SK high performance wedge belts DIN 7753 Part 1

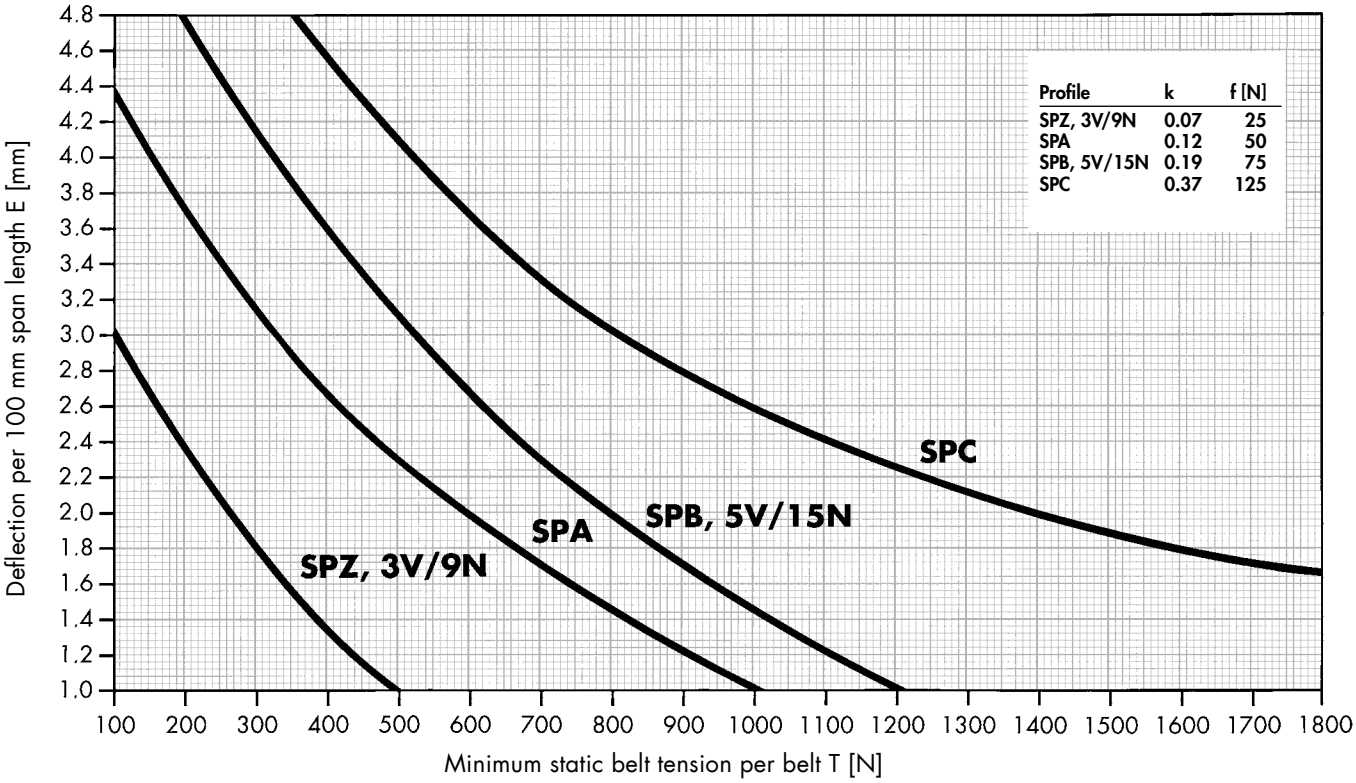

Profile	k	f [N]
SPZ, 3V/9N	0.07	25
SPA	0.12	50
SPB, 5V/15N	0.19	75
SPC	0.37	125

Diagram 9: Belt tension characteristics for optibelt VB classic V-belts DIN 2215

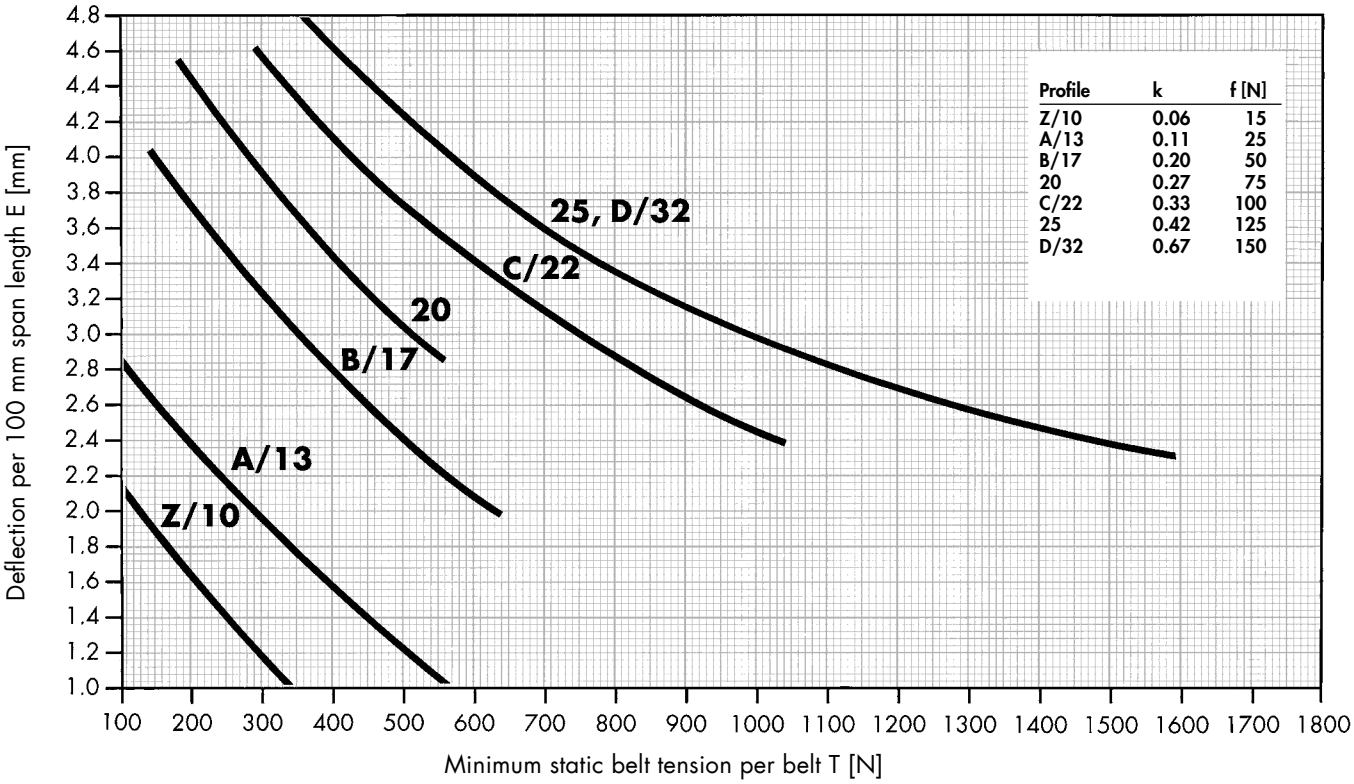

Profile	k	f [N]
Z/10	0.06	15
A/13	0.11	25
B/17	0.20	50
20	0.27	75
C/22	0.33	100
25	0.42	125
D/32	0.67	150

 © ARNTZ OPTIBELT GROUP, GERMANY

Diagram 10: Belt tension characteristics for optibelt X-POWER M=S wedge belts – raw edge, cogged

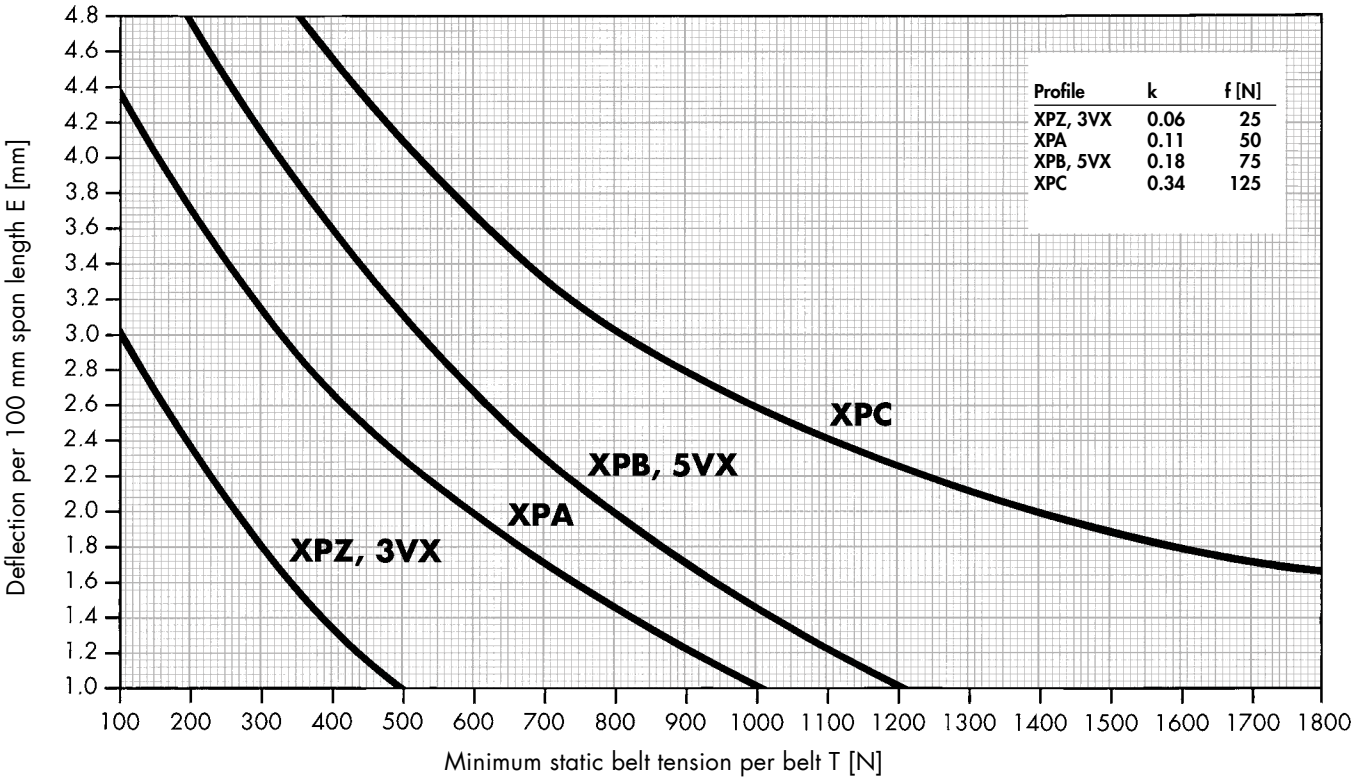

Diagram 11: Belt tension characteristics for optibelt SUPER TX M=S V-belts – raw edge, cogged

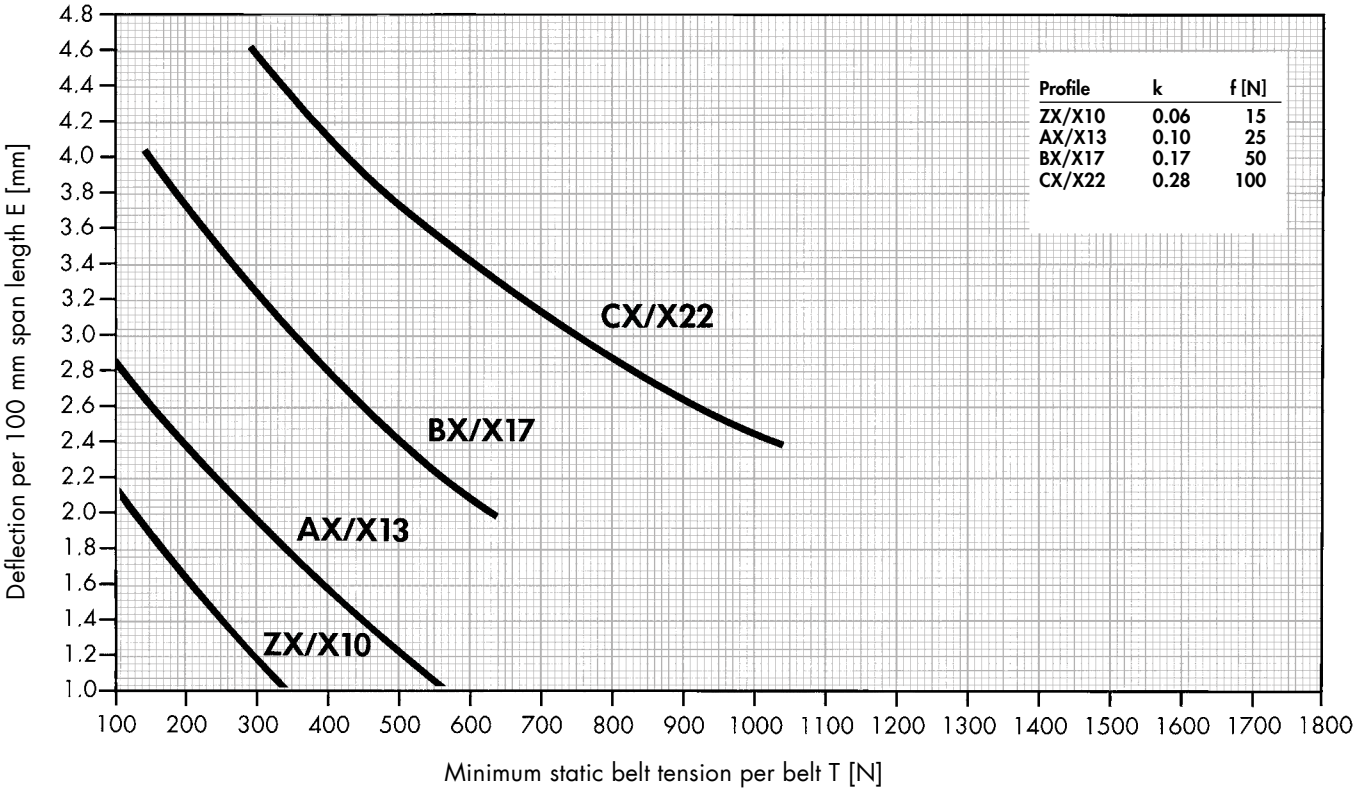

III. Belt tensioning via "length addition value" method

It has become evident that span deflection methods are not ideal for checking the tension of kraftbands of all profiles, and of individual belts. The following, very simple method for the setting and checking of belt tension is therefore recommended:

Example:
P_B = 1136 kW
c_1 = 0.97
v = 25.91 m/s

Drive arrangement with one set comprising:
2 optibelt KB kraftbands 4-8V 3750/25J 9525 L_a
2 optibelt KB kraftbands 5-8V 3750/25J 9525 L_a

1. Calculation of the static belt tension "T":

$$T \approx \frac{500 \cdot (2.04 - c_1) \cdot P_B}{c_1 \cdot z \cdot v} + k \cdot v^2$$

$$T \approx \frac{500 \cdot (2.04 - 0.97) \cdot 1136}{0.97 \cdot 18 \cdot 25.91} + 0.69 \cdot 25.91^2 = \mathbf{1807\ N}$$

2. Measure the setting length "M" of the kraftband or the single belt, on the top surface of the kraftband or on the belt top surface when not tensioned. However the belt can be measured when fitted to the drive, provided that it is completely **without** tension.

3. Procedure
   a) Install the kraftband or the single belt on the pulleys. Provisionally tighten the belt in order to seat it into the pulley grooves.
   b) Next, completely slacken the kraftband or the single belt.
   c) Mark two lines on the top of the belt, with distance "M". The lines must be marked on the free span length, not where the belt is on the pulley ("M" should ideally be 1000 mm minimum or a multiple of it).

   Important: The longer the measured profile, the more accurate the tension setting will be.

4. Calculate the length additional value "A" using the formula:

$$A = \frac{M \cdot R}{1000}$$

R = stretch factor from table 84 page 149

"M" selected 4000 mm

$$A = \frac{4000 \cdot 5.5}{1000} = 22.0\ \text{mm}$$

5. Tighten the kraftband or the single belt until the length calculated under point 4 is reached. The drive is now correctly tensioned.

Tighten the kraftband until the length additional value is reached. This will set the correct tension.

6. If the drive has to be re-tensioned, the belts have to be slackened first so that they can be re-measured completely free of tension. After that, the procedure described in paragraphs 3 to 5 applies.

At initial installation, the static belt tension must be multiplied by 1.3.

 © ARNTZ OPTIBELT GROUP, GERMANY

DESIGN SUPPORT

BELT TENSION FOR OPTIBELT V-BELTS AND optibelt KB KRAFTBANDS

Table 84: Length addition per 1000 mm belt length

Profile	Kraftband	3V/9J	5V/15J	8V/25J	SPZ	SPA	SPB	SPC	A/HA	B/HB	C/HC	D/HD
	Single belt	3V/9N	5V/15N	8V/25N	SPZ	SPA	SPB	SPC	A/13	B/17	C/22	D/32
Minimum static belt tension per rib/single belt T [N]		[mm]	[mm]	[mm]	[mm]	[mm]	[mm]	[mm]	[mm]	[mm]	[mm]	[mm]
	50	0.8			0.8	0.8			0.8			
	75	1.2			1.2	1.0			1.0			
	100	1.6			1.6	1.3			1.3			
	125	2.1			2.1	1.6			1.6			
	150	2.6			2.6	1.9			1.9	0.8		
	175	3.0			3.0	2.2			2.2	0.9		
	200	3.5			3.5	2.5			2.5	1.1		
	225	4.0			4.0	2.8			2.8	1.2		
	250	4.5			4.5	3.0			3.0	1.4		
	275	4.9			4.9	3.3			3.3	1.5		
	300	5.3	1.3		5.3	3.6	1.3		3.6	1.6	1.6	
	350	6.4	1.7		6.4	4.2	1.7		4.2	1.8	1.8	
	400	7.6	2.0		7.6	4.7	2.0		4.7	2.0	2.1	
	450	8.7	2.4		8.7	5.3	2.4		5.3	2.2	2.3	
	500	10.0	2.7		10.0	5.8	2.7		5.8	2.5	2.5	
	550		3.1				3.1			2.7	2.7	
	600		3.4				3.4	2.0		3.0	2.9	2.0
	650		3.8				3.8	2.2		3.2	3.1	2.2
	700		4.1				4.1	2.4		3.5	3.4	2.4
	800		4.8				4.8	2.8		4.2	3.8	2.7
	900		5.5				5.5	3.3		4.8	4.2	2.9
	1000		6.2				6.2	3.7		5.3	4.7	3.3
	1100		6.9				6.9	4.1			5.1	3.6
	1200		7.6	2.9			7.6	4.5			5.5	3.9
	1300		8.3	3.3			8.3	5.0				4.2
	1400		9.0	3.7			9.0	5.4				4.5
	1500		9.7	4.1			9.7	5.8				4.8
	1600		10.4	4.6			10.4	6.3				5.1
	1700		11.1	5.0			11.1	6.8				5.5
	1800		11.8	5.5			11.8	7.3				5.8
	1900			6.0				7.8				
	2000			6.5				8.3				
	2100			7.0				8.8				
	2200			7.5				9.3				
	2300			8.0				9.8				
	2400			8.6								
	2500			9.6								
	2600			10.6								
	2700			11.7								
	2800			12.8								
	2900			13.5								
	3000			14.2								
	3100			14.9								
	3200			15.6								
	3300			16.3								
Factor k for kraftbands		0.12	0.25	0.69	0.12	0.16	0.25	0.55	0.16	0.27	0.45	0.85
Factor k for single belts		0.07	0.19	0.57	0.07	0.12	0.19	0.37	0.11	0.20	0.33	0.67

Intermediate values may be determined by linear interpolation.
The values only apply to drives with V-grooved pulleys.
Values for V-flat drives on request.

DESIGN SUPPORT

CALCULATING THE AXIAL LOAD/SHAFT LOAD UNDER DYNAMIC CONDITIONS

Using drives that have electric motors as drive machines and are/or will be designed according to DIN 2211 Part 3, ensures that the dynamic stress that occurs can be absorbed by the appropriate shafts and bearings of the motor.

However drives with

- electric motors out with the DIN standards for the determined dependencies of pulley diameter and power,
- combustion engines,
- turbines as well as
- heavy duty drives such as stone crushers, calenders or heavily loaded mills

have been found to require determination of the dynamic bearing load, i.e. the loads that occur for shafts and bearings on the input or output drive units.

Precise calculation of the "Dynamic axial load" prevents unnecessary costs due to

- premature failure of the bearing,
- breaking of the shaft,
- over dimensioned bearings and shafts.

In the case of 2-pulley drives, the driver and driven shafts and the bearings are subjected to the same dynamic axial force, but in opposite directions. When idlers are employed, the magnitude and the direction of the axial force are almost always different on each pulley. If the magnitude and direction of the dynamic axial force is to be determined, a graphical solution, using a vector diagram for the dynamic forces in the tight side S_1 and the slack side S_2, is recommended.

If only the magnitude of the dynamic axial force has to be determined, this can be achieved using the formula for "$S_{a\ dyn}$". Both procedures will be illustrated in the following example.

Data from the calculation examples given on pages 85 to 87

P_B = 171.6 kW c_1 = 1.00

v = 21.76 m/s β = 170°

Dynamic tension on the tight side during belt operation

$$S_1 \approx \frac{1020 \cdot P_B}{c_1 \cdot v}$$

$$S_1 \approx \frac{1020 \cdot 171.6}{1.0 \cdot 21.76} \approx \mathbf{8044\ N}$$

Dynamic tension on the slack side during belt operation

$$S_2 \approx \frac{1000 \cdot (1.02 - c_1) \cdot P_B}{c_1 \cdot v}$$

$$S_2 \approx \frac{1000 \cdot (1.02 - 1.0) \cdot 171.6}{1.0 \cdot 21.76} \approx \mathbf{158\ N}$$

A) Graphical solution

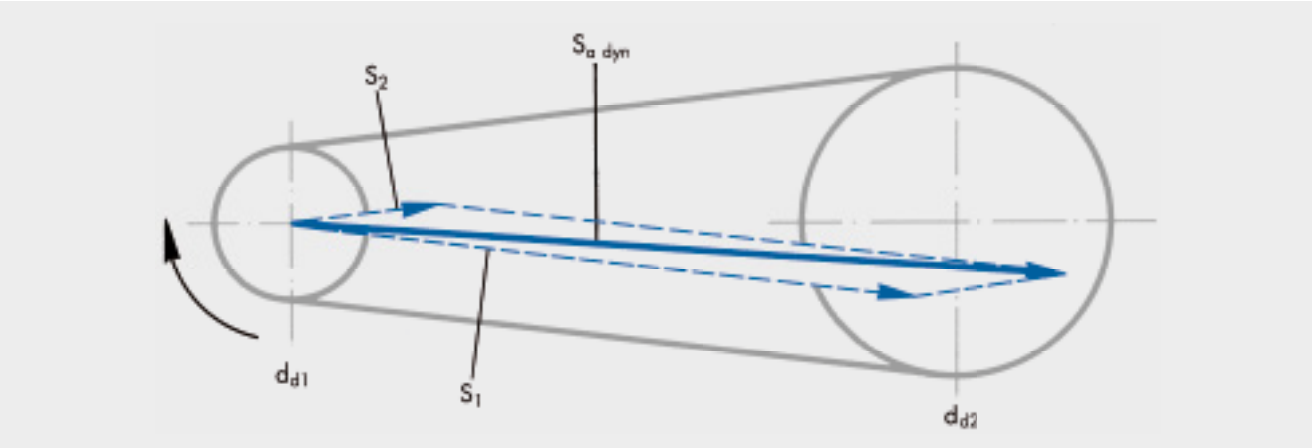

B) Solution using the formula $S_{a\ dyn}$

Axial load under dynamic conditions

$$S_{a\ dyn} \approx \sqrt{S_1^2 + S_2^2 - 2\, S_1 \cdot S_2 \cdot \cos\beta}$$

$$S_{a\ dyn} \approx \sqrt{8044^2 + 158^2 - 2 \cdot 8044 \cdot 158 \cdot 0.9848} \approx \mathbf{8200\,N}$$

 © ARNTZ OPTIBELT GROUP, GERMANY

DESIGN SUPPORT
TECHNICAL TOOLS
FREQUENCY METER / TENSION TESTER optibelt TT

The optibelt TT frequency tension tester is an appliance that is used to check the tension of drive belts by means of measuring frequency. Thanks to a compact design, this product offers universal application possibilities in machine construction, in the automotive industry and many other technical applications.
The optibelt TT can even be effortlessly used in difficult-to-reach places so that the tension values of V-belts, ribbed belts and timing belts can be easily and quickly checked.
After start up, the device is immediately ready for obtaining data. The measuring head is held over the belt to be tested (two red LED light points help to position it). The belt is made to vibrate by striking it with a finger or an object.
The optibelt TT begins recording data and displays the result in Hertz [Hz].
The condition, colour and type of the belt have no effect upon the measurement.
The sample calculation below uses the data from the CAP calculation on page 88.

Calculation of frequency

$$f = \sqrt{\frac{T \cdot 10^6}{4 \cdot k \cdot L^2}}$$

$$f = \sqrt{\frac{1484\ N \cdot 10^6}{4 \cdot 0.377 \frac{kg}{m} \cdot 2189.3^2\ mm^2}} = 14.33\ Hz \approx 14.3\ Hz$$

Calculation of static belt tension

$$T = 4 \cdot 10^{-6} \cdot k \cdot L^2 \cdot f^2$$

$$T = 4 \cdot 10^{-6} \cdot 0.377 \frac{kg}{m} \cdot 2189.3^2\ mm^2 \cdot 14.33^2\ Hz^2 = 1484.24\ N \approx 1484\ N$$

T ≙ belt tension [N]
k ≙ meter weight [kg/m]
L ≙ belt length [mm]
f ≙ frequency [Hz]

Advantages of optibelt TT

- Two trouble-free measuring methods:
  EM: electro magnetic wave
  AC: acceleration, integrated
- Usable also for long centre distances by all-time wide frequency range:
  AC: 1 - 10 Hz
  EM: 6 - 600 Hz
- Easy handling of the measuring head: two red LED points on the belt help to find the correct position
- For hard accessible belt span: measuring head on flexible gooseneck (EM) or with 250 mm cable (AC)
- Safe meter-reading by big display: width 43 mm and height 58 mm, illuminated and colored
- Long running time and environment-friendly by high capacity, rechargeable battery (USB) and changeability
- Chargeable via USB
- No interference in loud and bright environments
- Automatic switch-off function

The optibelt TT:
A guarantee for longer durability of your V-belts, ribbed belts, and timing belts!

DESIGN SUPPORT
TECHNICAL TOOLS
FREQUENCY METER / TENSION TESTER optibelt TT LINE

Advantages of optibelt TT DATA

- Comfortable input and selection of belt drive data on touch screen; show own company logo on start display
- Use own belt drive data and general belt set values from optibelt TT database and span length calculation
- Simultaneous display: set, measuring values; simple descision to okay / not okay: select and register tolerances
- Save measurement results and new belt drive data in optibelt TT DATA: Micro SD slot including Micro SD card
- PC synchronisation for database administration with optibelt TT DATA software: USB cable, Micro SD card; optibelt TT DATA update
- Use data from CAP 7.0 in optibelt TT DATA: Send belt drive identification and set values to TT DATA software

Advantages of optibelt TT RFID

- Integrated optibelt TT RFID Reader loads belt drive data directly from the machine: RFID LABEL with data set
- RFID database administration on optibelt TT RFID or, more comfortable on PC: optibelt TT DATA/RFID software
- RFID LABEL data in- and output with optibelt TT RFID or with PC: optional USB RFID Reader Dongle
- RFID LABEL with free print area for address data of machine and user; adhesive backside, on paper rolls
- Print and data input of RFID LABEL with RFID printer: Data e-mailing, RFID LABEL by post
- Easy mounting of RFID LABEL on the machine: 6 mm thick, adhesive and screwable RFID PLATE

Follow soon!

 © ARNTZ OPTIBELT GROUP, GERMANY

DESIGN SUPPORT
TECHNICAL TOOLS
optibelt OPTIKRIK TENSION GAUGES

This gauge offers a simple method of belt tensioning.

It helps e. g. mechanics during the maintenance of belt drives when technical data is not known and the optimum tension therefore cannot be calculated. This method requires only knowledge of the diameter of the small pulley and the belt profile. The Optibelt tension gauge is used to directly read the belt tension. By reducing or increasing the belt tension the desired value is achieved.
For different tensioning values, optibelt OPTIKRIK 0, I, II, III with corresponding measurement ranges are available.

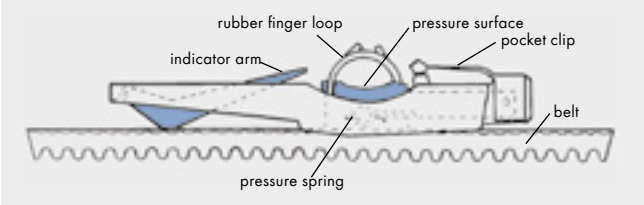

Instructions for use

1. The gauge is placed in the middle between the two pulleys on the back of the belt, in the case of sets of belts ideally on the belt in the middle. (Before doing so, please press the indicator completely into the gauge body.)
2. Place the gauge loosely on the belt to be measured and slowly press a finger onto the pressure surface.
3. Try not to touch the gauge with more than one finger during the measuring process.
4. When you feel or hear a definite "click", immediately release the pressure, the indicator arm stays in the measured position.
5. Carefully lift the gauge without moving the indicator arm. Read the belt tension (see fig.). Read the measurement at the exact point where the top of the indicator arm crosses the scale.
6. Reduce or increase the belt tension according to the measurement result until it is within the desired tension level.

DESIGN SUPPORT

BELT TENSION FOR WRAPPED OPTIBELT V-BELTS

Profile	Diameter of the small pulley [mm]	Static belt tension [N]						
		optibelt RED POWER 3		Standard (wrapped)		optibelt BLUE POWER		
		Initial installation new V-belts	Initial installation existing V-belts	Initial installation	Operation after running in	Diameter of the small pulley	Initial installation new V-belts	Operation after running in
SPZ; 3V/9N	≤ 71 > 71 ≤ 90 > 90 ≤ 125 > 125*	250 300 400	200 250 300	200 250 350	150 200 250	–	–	–
SPA	≤ 100 > 100 ≤ 140 > 140 ≤ 200 > 200*	400 500 600	300 400 450	350 400 500	250 300 400	–	–	–
SPB; 5V/15N	≤ 160 > 160 ≤ 224 > 224 ≤ 355 > 355*	700 850 1000	550 650 800	650 700 900	500 550 700	≤ 180 > 180 ≤ 236 > 236 ≤ 400 > 400*	780 1100 1500	600 850 1100
SPC	≤ 355 > 355 ≤ 560 > 560*	1400 1600 1900	1100 1200 1500	1000 1400 1800	800 1100 1400	≤ 280 > 280 ≤ 375 > 375 ≤ 700 > 700*	1600 2500 3100	1200 1900 2400
Z/10	> 50 ≤ 71 > 71 ≤ 100 > 100*	–	–	120 140	90 110	–	–	–
A/13	≤ 80 > 80 ≤ 100 > 100 ≤ 132 > 132*	–	–	150 200 300	110 150 250	–	–	–
B/17	≤ 125 >125 ≤ 160 >160 ≤ 200 >200*	–	–	300 400 500	250 300 400	–	–	–
C/22	≤ 200 > 200 ≤ 250 > 250 ≤ 355 > 355*	–	–	700 800 900	500 600 700	–	–	–
D/32	≤ 355 > 355*	–	–	1000 1200	750 900	–	–	–
8V	Check of belt tension via length addition value							

* Tension values for these pulleys must be calculated.

Tension gauges:

optibelt OPTIKRIK 0	Measuring range:	70 - 150 N
optibelt OPTIKRIK I	Measuring range:	150 - 600 N
optibelt OPTIKRIK II	Measuring range:	500 - 1400 N
optibelt OPTIKRIK III	Measuring range:	1300 - 3100 N

The tension values (static belt tension) are reference values, if no exact drive data is available. These values are given for maximum power transmission (per belt).

Calculation basis

Wedge belts	speed v = 5 to 42 m/s
Classic V-belts	speed v = 5 to 30 m/s

 © ARNTZ OPTIBELT GROUP, GERMANY

DESIGN SUPPORT

BELT TENSION FOR RAW EDGE OPTIBELT V-BELTS

Profile	Diameter of the small pulley [mm]	Static belt tension [N] optibelt SUPER X-POWER M=S optibelt SUPER E-POWER M=S optibelt SUPER TX M=S	
		Initial installation	Operation after running in
XPZ; 3VX/9NX	≤ 71 > 71 ≤ 90 > 90 ≤ 125 > 125*	250 300 400	200 250 300
XPA	≤ 100 > 100 ≤ 140 > 140 ≤ 200 > 200*	400 500 600	300 400 450
XPB; 5VX/15NX	≤ 160 > 160 ≤ 224 > 224 ≤ 355 > 355*	700 850 1000	550 650 800
XPC	≤ 250 > 250 ≤ 355 > 355 ≤ 560 > 560*	1400 1600 1900	1100 1200 1500
ZX/X10	≤ 50 > 50 ≤ 71 > 71 ≤ 100 > 100*	120 140 160	90 110 130
AX/X13	≤ 80 > 80 ≤ 100 > 100 ≤ 132 > 132*	200 250 400	150 200 300
BX/X17	≤ 125 >125 ≤ 160 >160 ≤ 200 >200*	450 500 600	350 400 450
CX/X22	≤ 200 > 200 ≤ 250 > 250 ≤ 355 > 355*	800 900 1000	600 700 800
DX/X32	≤ 355 > 355*	1000 1200	750 900

* Tension values for these pulleys must be calculated.

Tension gauges:

optibelt OPTIKRIK 0 Measuring range: 70 - 150 N
optibelt OPTIKRIK I Measuring range: 150 - 600 N
optibelt OPTIKRIK II Measuring range: 500 - 1400 N
optibelt OPTIKRIK III Measuring range: 1300 - 3100 N

The tension values (static belt tension) are reference values, if no exact drive data is available. These values are given for maximum power transmission (per belt).

Calculation basis

Wedge belts speed v = 5 to 42 m/s
Classic V-belts speed v = 5 to 30 m/s

 © ARNTZ OPTIBELT GROUP, GERMANY

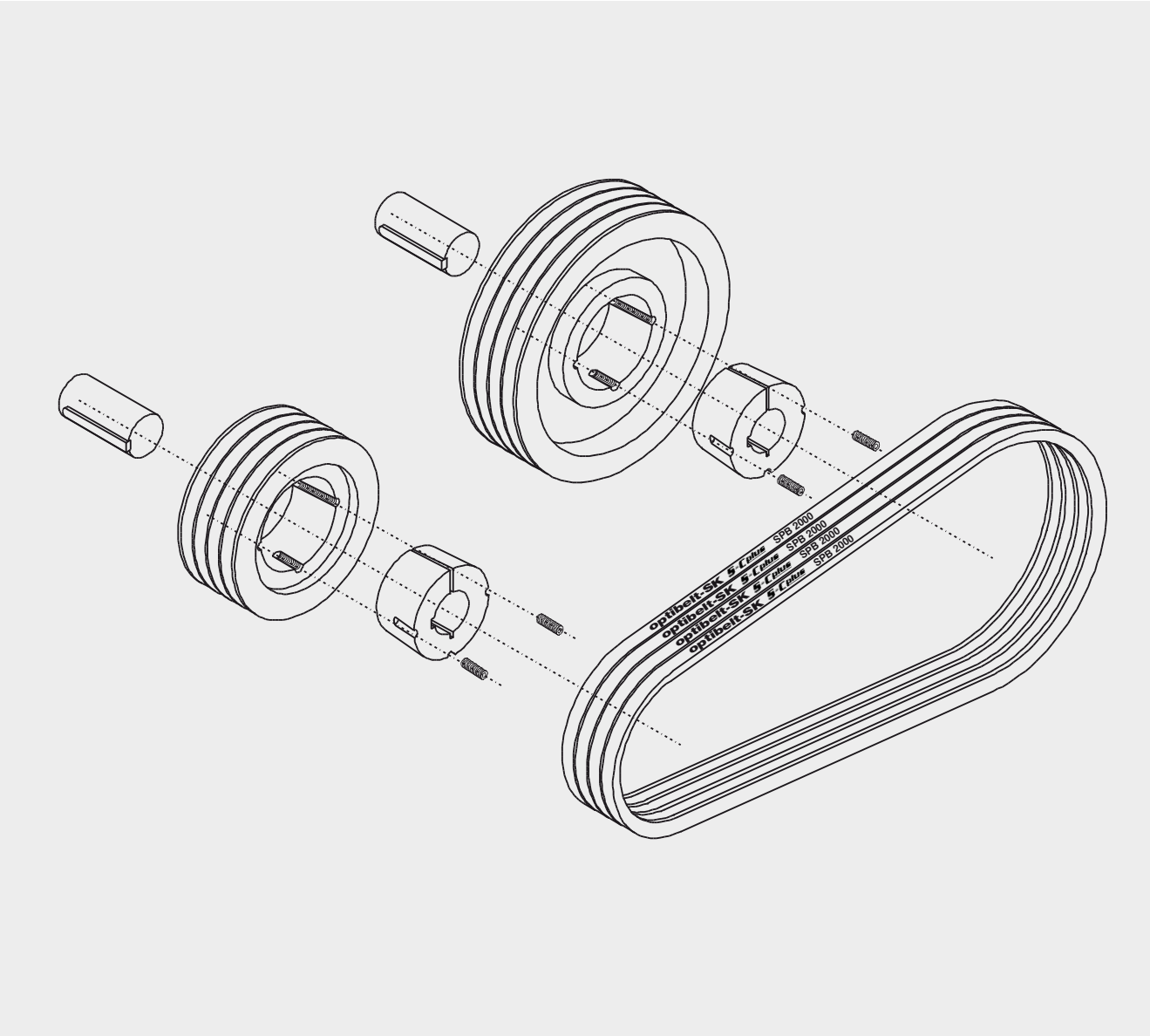
optibelt-SK S-Line SPB 2000
optibelt-SK S-Line SPB 2000
optibelt-SK S-Line SPB 2000
optibelt-SK S-Line SPB 2000

Safety: Before starting any maintenance work, it is extremely important that any machine components are in a safe position which cannot be changed during maintenance work. In addition, safety recommendations of the manufacturer are to be strictly observed.

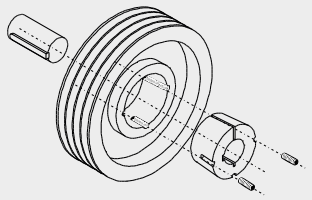

optibelt KS V-GROOVED PULLEY WITH TAPER BUSH

The V-grooved pulleys are to be checked for damage and correct dimensions before installation.

Installation

1. All shiny surfaces like bore and tapered surface of the taper bush as well as the tapered bore of the pulley have to be cleaned and degreased. Insert taper bush in hub and align all connecting bores. Half tapped holes have to face half plain bores.
2. Stud screws (TB 1008-3030) and/or cap head screws (TB 3525-5050) should be slightly greased and screwed in. Do not yet tighten the screws.
3. Clean and degrease the shaft. Push pulley with taper bush to the desired position on the shaft. See alignment of the V-grooved pulley.
4. When using a key, it has to be inserted in the hub of the shaft first. Between key and bore hub there needs to be a certain tolerance.
5. With a socket wrench according to DIN 911 stud screws and/or cap head screws have to be tightened equally using the tightening torque stated in the table.
6. After a short operating time (0.5 to 1 hour) check tightening torque of the screws and correct if necessary.
7. In order to prevent the entering of foreign substances, fill empty connection bores with grease.

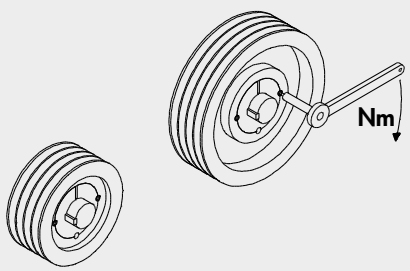

TAPER BUSHES, SCREW TIGHTENING TORQUE

Dimension	Wrench size	Number of screws	Tightening torque [Nm]
TB 1008, 1108	3	2	5.7
TB 1210, 1215, 1310, 1610, 1615	5	2	20.0
TB 2012	6	2	31.0
TB 2517	6	2	49.0
TB 3020, 3030	8	2	92.0
TB 3525, 3535	10	3	115.0
TB 4040	12	3	172.0
TB 4545	14	3	195.0
TB 5050	14	3	275.0

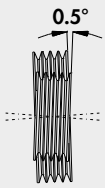

HORIZONTAL ALIGNMENT OF SHAFTS

Motor and drive shafts are to be aligned using a spirit level, if necessary.

Note!

Maximum shaft deviation 0.5°

VERTICAL ALIGNMENT OF THE V-GROOVED PULLEYS

The alignment of the V-grooved pulleys is checked before and after tightening the taper bushes with an alignment rail.

Note!

Check whether the face widths of the V-grooved pulleys have the same sizes. A possible deviation of the face width has to be taken into account. With a symmetrical face set-up, the distance of the parallel, to the smaller face is half the deviation.

 © ARNTZ OPTIBELT GROUP, GERMANY

DESIGN SUPPORT
INSTALLATION AND MAINTENANCE SUPPORT

INITIAL INSTALLATION

Always install the V-belts without force. Installations using screw drivers, crowbars etc. cause external and internal damage to the belt. V-belts installed under force might only run for several days. A proper installation of the belt saves time and money.

If the installation space is too small, the V-grooved pulleys with belts should be slid onto the shafts.

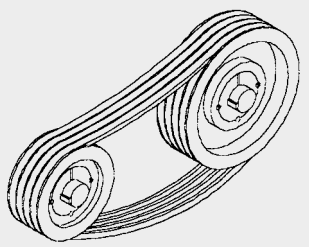

BELT TENSION

Use belt tensioning values according to Optibelt recommendations. Set the belt tension with parallel motor and machine shafts. Operate the belt for some rotations and check the belt tension again. In our experience, belt tension should be checked again after an operating time of about 0.5 to 4 hours and then be corrected, if necessary.

For further information about belt tensioning see page 151/152.

*** optibelt OPTIKRIK**

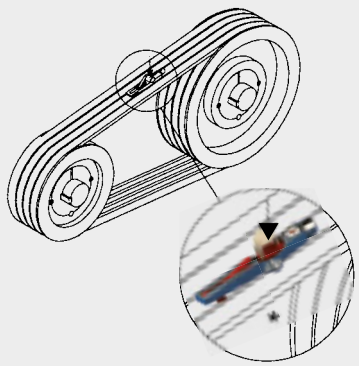

ALLOWED SHAFT DEVIATION

After applying the initial installation tension, the distances X_1, X_2 between the two pulleys d_{d1}, d_{d2} and the alignment rail on axis level should be measured, alternatively with the optibelt LASER POINTER. The maximum allowed values for the distance X from the table should not be exceeded, depending on the diameter d_d. Depending on the pulley diameter, the intermediate values for X should be interpolated.

Pulley diameter d_{d1}, d_{d2}	Maximum allowed deviation X_1, X_2
112 mm	0.5 mm
224 mm	1.0 mm
450 mm	2.0 mm
630 mm	3.0 mm
900 mm	4.0 mm
1100 mm	5.0 mm
1400 mm	6.0 mm
1600 mm	7.0 mm

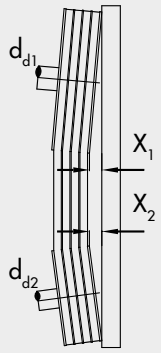

DRIVE CHECKING

We recommend checking the drive regularly, e.g. after each 3 to 6 months. V-grooved pulleys are to be checked for wear and consistency. Use the Optibelt profile and V-groove gauge tools.

When changing V-grooved pulleys with taper bushes (see fig. on page 160) the following aspects have to be observed:

1. Loosen all screws. Unscrew out one or two screws depending on the bush size, grease them and screw them into the set bores.
2. Tighten the screw or screws equally until the bush releases from the hub and the pulley can be moved freely on the shaft.
3. Remove the pulley with the bush from the shaft.

**** Profile and V-groove gauge**

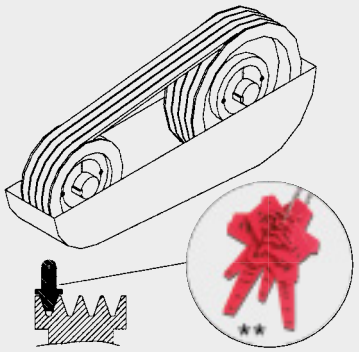

DESIGN SUPPORT

INSTALLATION AND MAINTENANCE SUPPORT
V-GROOVED PULLEYS WITH TAPER BUSHES

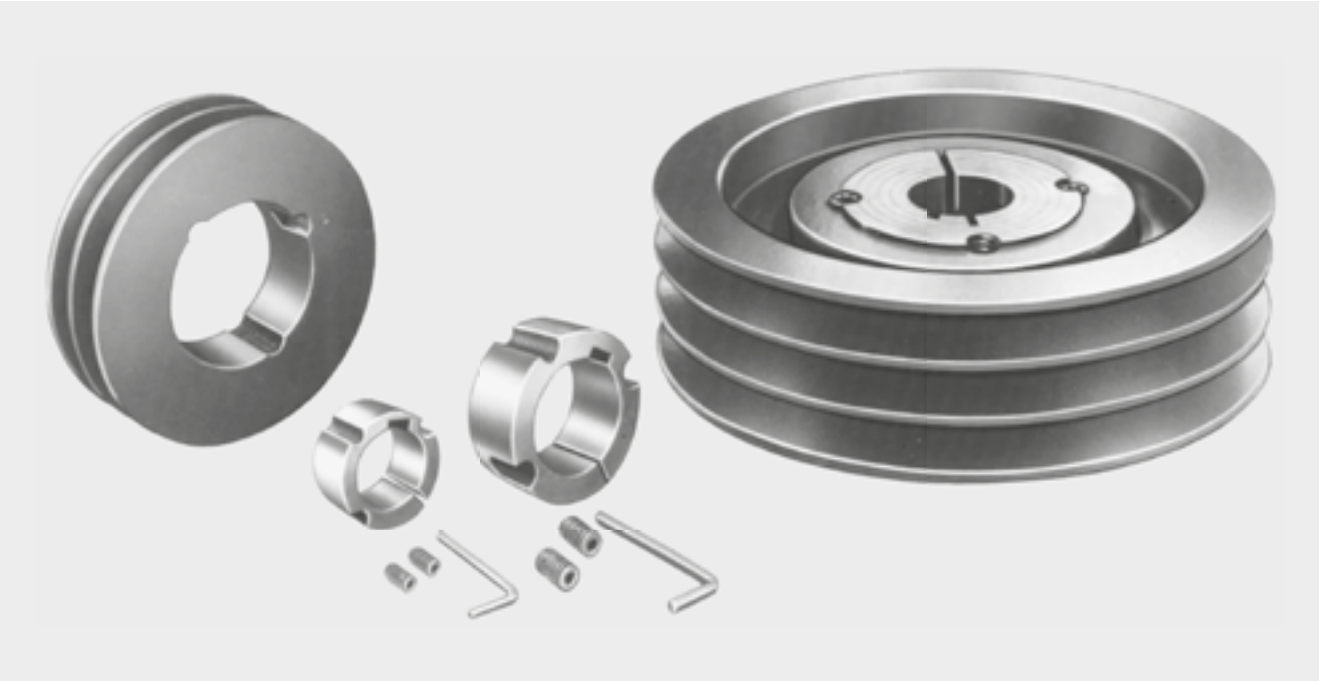

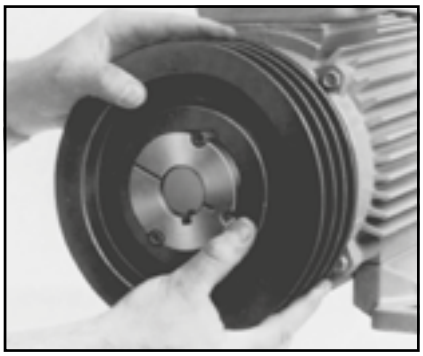

Installation

Dimension
TB 1008-3030

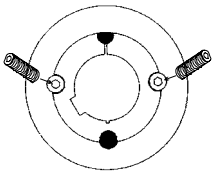

Dimension
TB 3525-5050

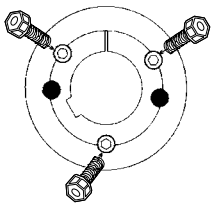

Removal

Dimension
TB 1008-3030

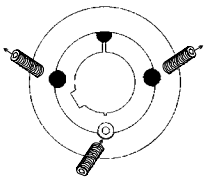

Dimension
TB 3525-5050

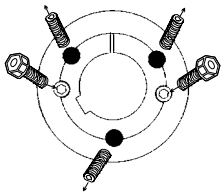

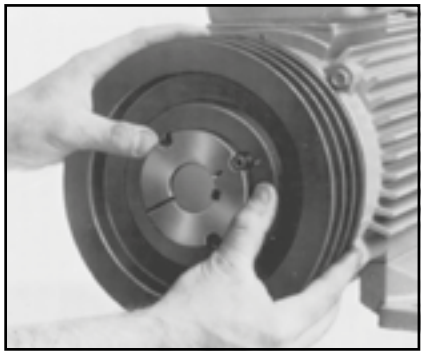

 © ARNTZ OPTIBELT GROUP, GERMANY

DESIGN SUPPORT
STORAGE

- **General note**
  Properly stored V-belts retain their properties for many years (see also DIN 7716). However, when stored under adverse conditions or handled incorrectly, the physical properties of most rubber products will be impaired. This can be the consequence for example of the effects of oxygen, ozone, extreme temperatures, light, moisture or solvents.

- **Storage area**
  The storage area should be dry and dust-free. V-belts must not be stored close to chemicals, solvents, fuels, lubricants and acids etc.

- **Temperature**
  V-belts should be stored at temperatures between +15 °C and +25 °C. Lower temperatures usually have no negative effect on the V-belts. However, since belts become very stiff at low temperatures, they should be warmed to approximately +20 °C before installation to avoid breaking and cracking.
  Radiators and supply pipes should be screened. V-belts should be stored at least 1 m away from heat sources.

- **Light**
  V-belts should be protected against light, especially direct sunlight and strong artificial light with high ultra-violet radiation (ozone formation) such as naked fluorescent tubes. Illumination using appropriate lamps is recommended.

- **Ozone**
  In order to counteract the harmful effects of ozone, storages should not contain any appliances that generate ozone, e.g. fluorescent lights, mercury vapour lamps or high voltage electrical equipment. Combustion gases and vapours which could lead to the formation of ozone by photo-chemical processes must be avoided or eliminated.

- **Moisture**
  Damp storage areas are unsuitable. Care must be taken to ensure that condensation does not develop. The most favourable relative air humidity is below 65 %.

- **Proper storage**
  Because stress can promote both permanent deformation and cracking, care must be taken to ensure that V-belts are stored without stress i.e. without tension, compression or any other form of pressure.
  If V-belts have to be stored horizontally and stacked on top of each other, it is recommended that the stack height does not exceed 300 mm in order to avoid permanent deformation. If, in order to save space, V-belts are hung, the diameter of the cylinder on which the belts rest should be at least ten times the height of the belt profile.

  optibelt S=C Plus, optibelt SUPER E-POWER M=S, optibelt SUPER X-POWER M=S and optibelt SUPER TX M=S belts do not need to be stored in sets as they can be used in sets without measuring.

- **Cleaning**
  Dirty V-belts can be cleaned using a 1:10 mixture of glycerine and methyl spirits or with brake cleaner. Petrol, benzene, turpentine and the like should not be used. In addition, sharp objects, wire brushes, emery paper etc. must be avoided under all circumstances, as these can cause damage to the belt.

DESIGN SUPPORT
PROPERTIES

This table is intended to simplify the selection of the suitable Optibelt drive element according to the specific drive conditions. Detailed information is given in the according chapters of this manual.	Temperature resistance from … to … [°C]		Oil resistance		Electrically conductive	S=C Plus SetConstant[1] M=S Matched Sets[2]	Mining industry approval	Smooth running	Permanent stretch	
	Standard design	Special design XHR	Standard design	Special design					Standard design	Special design
optibelt SK / optibelt SK KB high performance wedge belts/kraftbands	–40 +70	–30 +90	good	excellent	yes	yes[1]	yes	medium/ good	low	very low
optibelt RED POWER 3 / optibelt KB RED POWER 3 high performance wedge belts/kraftbands	–30 +100		good		yes	yes[1]		good	very low	
optibelt BLUE POWER / optibelt KB BLUE POWER high performance wedge belts/kraftbands	– 30 +100		good		yes			excel-lent	very low	
optibelt SUPER X-POWER M=S / optibelt KBX / optibelt SUPER TX M=S raw edge, cogged V-belts	–30 +90		good		yes	yes[2]		good	very low	
optibelt SUPER E-POWER M=S	– 40 +120		limited		yes			good	very low	
optibelt MARATHON 1, optibelt MARATHON 2 M=S automotive V-belts	–30 +90		good		yes	yes[2]		good	very low	
optibelt VB classic V-belts	–40 +70	–30 +90	limited	excellent	yes	yes[1]	yes	medium/ good	low	very low
optibelt DK double-sided V-belts	–35 +85		good		yes			medium	low	
optibelt VARIO POWER variable speed belts	–30 +90		good		yes			excel-lent	very low	
optibelt RB ribbed belts	–30 +90	– 30 +120	good		• PJ PK, PL special construc-tions			excel-lent	low	

• after testing/examination

 © ARNTZ OPTIBELT GROUP, GERMANY

DESIGN SUPPORT
PROPERTIES

Recommended max. belt speed m/s	Efficiency	Behaviour under shock loading	Vibration tendency	Synchronous	Recommended max. speed ratio	Suitable for outside idlers		Maintenance	**Main application areas** For some application areas and applications different belt types are suitable. The suitable belt is then determined individually for each case.
						Standard construction	Special construction		
≤ 42	up to 97%	good	low	no	up to 1 : 10	no	yes	low	Compressors, mixers, rotary print machines, extruders, screw compressors, weaving machines, axial fans, rotary pumps
≤ 55*	up to 97%	good	low	no	up to 1 : 10	yes		maintenance-free	Fans, pumps, mixers, mills, special machines, lathes and drilling machines, grinding machines
≤ 50*	up to 97%	limited	low	no	up to 1 : 10	yes			Medium to large, heavy to very heavy drives in the machine building industry
depends on profile ≤ 55*	up to 97%	good	low	no	up to 1 : 12	no	yes	optibelt SUPER X-POWER: low maintenance	Fans, pumps, mixers, mills, special machines, lathes and drilling machines, grinding machines
≤ 55*	up to 97%	good	low	no	up to 1 : 12	no	yes	low maintenance	Fans, pumps, mixers, mills, special machines, lathes and drilling machines, grinding machines
≤ 42	up to 97%	good	low	no	up to 1 : 12	no	yes	low maintenance	Motor vehicles, generators, water pumps, fans
≤ 30	up to 97%	good	low	no	up to 1 : 12	no	yes	low	Pumps, presses, crushers, disk saws, box column drilling machines, plane machines, concrete mixers, compactors, lawn mowers, aerators, baling presses, shredders
≤ 30	up to 95%	good	low	no	up to 1 : 5	yes		low	Special drives with changing rotary directions, weaving looms, sweepers, harvesters
depends on profile ≤ 42	up to 95%	good	low	no	up to 1 : 12 for 2 variable speed pulleys	no	yes	low	Special drives, compact units, snow mobile drives, multi-colour offset printing machines, variable speed pulley sets, threshing drum drives, winding machines, lathes
depends on profile ≤ 60	up to 96%	good	very low	no	up to 1 : 35	yes		low	Offset machines, washing machines, milling machines, electric floor polishers, auxiliaries, main spindle drives

* v > 42 m/s. Please contact our Application Engineering Department.

DESIGN SUPPORT
PROPERTIES

This table is intended to simplify the selection of the suitable Optibelt drive element according to the specific drive conditions. Detailed information is given in the according chapters of this manual.	Temperature resistance from … to … [°C]		Oil resistance	Electrically conductive	Smooth running	Permanent stretch
	Standard design	Special design XHR and XCR	Standard design			
optibelt OMEGA, optibelt OMEGA HP + optibelt OMEGA HL timing belts	– 30 +100	– 40 +140	limited	yes•	medium/good	none
optibelt ZR timing belts	– 30 +100	– 30 +140	limited	yes	medium	none
optibelt ALPHA polyurethane timing belts	–30 +80		good	no	medium	none
optibelt RR round belts	–10 +80		good	no	medium	high
optibelt KK V-belting	–10 +80		good	no	medium	high
optibelt OPTIMAT OE open-ended V-belts, DIN 2216, punched	–20 +70		limited	no	medium	high
optibelt PKR endless timing belts with patterned top surface	–30 +70		limited	yes	medium	low
optibelt OPTIMAX HF endless high performance flat belts	– 20 +110		limited	no	excellent	low

• partly after testing/examination

 © ARNTZ OPTIBELT GROUP, GERMANY

DESIGN SUPPORT
PROPERTIES

Recommended max. belt speed m/s	Efficiency	Behaviour with shock loads	Vibration behaviour	Synchronous running	Recommended max. conversion	Suitable for outside idlers		Maintenance	**Main application areas** For some application areas and applications different belt types are suitable. The suitable belt is then determined individually for each case.
						Standard design	Special design		
depends on profile ≤ 80	up to 98 %	sensitive	depends on speed	yes	up to 1 : 10	yes	yes	maintenance-free	Textile machines, spinning machines, weaving machines, printing machines, paper machines, woodworking machines, machine tools, linear units, roller conveyors, ski systems, packaging machines, gate and door openers, lifting devices, mixers, extruders, compressors
depends on profile ≤ 80	up to 98 %	sensitive	depends on speed	yes	up to 1 : 10	yes	yes	maintenance-free	Copying machines, household appliances, swivel arm robots, gripper drives, belt grinders, camshaft drives, brush drives, clocks, X-Ray devices, enveloping machines, cameras, plotters, slot machines, main machines and feeders, feed drives, material feed, printers
depends on profile ≤ 80	up to 98 %	sensitive	depends on speed	yes	up to 1 : 10	yes	yes	maintenance-free	Cameras, plotters, printers, slot machines, main machines and feeders, feed drives, material feed, test conveyance, flight models
≤ 20	up to 95 %	good	low	no	up to 1 : 10	yes	yes	frequent retensioning	Special machinery
≤ 20	up to 95 %	good	low	no	up to 1 : 10	yes	yes	frequent retensioning	Packaging machines, conveyor units, enamelling lines, accumulating conveyor
≤ 20	up to 90 %	good	medium	no	up to 1 : 10	limited		frequent retensioning	Where installation conditions are difficult
depends on profile ≤ 20	up to 95 %	good	low	no	up to 1 : 10	limited	yes	low	Conveyor units in the wood industry, in concrete factories, in the agricultural industry, ceramic industry, glass industry, at airports, in seaports and inland ports
≤ 70	up to 95 %	good	very low	no	up to 1 : 12	yes		low	Water turbines, emergency power generators, saw gates, hackers, screw compressors, roller drives, transmission drives, conical drives, cross cutters, floor cleaners, multi-drives, crushers, close belts, hammer mills

DESIGN SUPPORT
PROBLEM – CAUSES – REMEDIES

Problem	Causes	Remedies
Belt failure shortly after installation (belt snaps)	Forced installation, causing damage to the tension cord	Follow installation instructions for easy installation
	Entry of foreign objects during operation	Fit protective guard
	Drive undersized, not enough belts	Check drive design and determine new dimensions
	Drive jammed	Remove cause
Breaks and cracks in the base of the belt (brittleness)	Outside idler pulley in use that does not comply with the positioning and sizes recommended by us	Observe Optibelt recommendations, e.g. increase the diameter; replace with an inside idler on the slack side of the drive; use optibelt RED POWER 3 or an Optibelt special design
	Pulley diameter too small	Re-design using recommended minimum pulley diameters; use an Optibelt special design, or optibelt SUPER X-POWER M=S, optibelt SUPER TX M=S
	Excessive heat	Remove or screen heat source; improve ventilation; use optibelt SUPER X-POWER M=S, optibelt SUPER TX M=S or V-belt with aramid cord construction
	Excessive cold	Warm the belt before operation; use Optibelt special design (extra cold resistant)
	Excessive belt slip	Re-tension drive according to installation instructions; check drive design and re-design if necessary
	Contamination by chemicals	Protect drive from contamination source; use Optibelt special design
Severe belt vibration	Drive underdimensioned	Check drive design and modify if necessary
	Centre distance significantly longer than recommended	Shorten centre distance; use an inside idler in the drive slack side; re-design using optibelt KB kraftbands
	High shock load	Use optibelt KB kraftbands; use an inside idler in the drive slack side; use an Optibelt special construction
	Belt tension too low	Correct tension
	Unbalanced V-pulleys	Balance pulleys
Belts cannot be re-tensioned	Insufficient allowance for centre distance in drive design	Modify drive to allow for the Optibelt recommended adjustment
	Excessive stretch caused by inadequate performance	Carry out drive calculation and re-design
	Incorrect belt length	Use shorter belts

Should other problems occur, please contact our Application Engineering Department. They will require comprehensive technical details in order to provide you with solutions.

 © ARNTZ OPTIBELT GROUP, GERMANY

DESIGN SUPPORT
PROBLEM – CAUSES – REMEDIES

Problem	Causes	Remedies
Belts turning over	Poor drive alignment Incorrect belt/pulley groove profile Excessive wear in pulley grooves Excessive vibration Belt tension too low Foreign matter in the pulley grooves	Realign pulleys Match belt and pulley groove profile Renew pulleys Use an inside idler on drive slack side; use optibelt KB kraftbands Re-tension drive Remove foreign matter and screen drive
Excessive wear on belt edges	Starting torque too high Incorrect pulley groove angle Excessive pulley groove wear Incorrect belt/pulley groove profile Poor pulley alignment Pulley diameter below recommended minimum Belt tension too low Belt rubbing against or catching on protruding parts	Check drive design and re-design Re-machine or replace pulleys Replace pulleys Match belt and pulley groove profile Realign pulleys Increase pulley diameter (re-design drive); use Optibelt special construc-tions, optibelt SUPER X-POWER M=S or optibelt SUPER TX M=S Check tension and re-tension Remove protruding parts; re-position drive
Excessive running noise	Poor pulley alignment Belt tension too low Drive overloaded	Realign pulleys Check tension and re-tension Check drive design and re-design if necessary
Belt swelling or softening and sticky	Contamination by oil, grease, chemicals	Protect drive from contamination source; use optibelt SUPER X-POWER M=S or optibelt SUPER TX M=S or Optibelt special design 05; clean pulley grooves with petrol, alcohol or brake cleaner before installation of new belts
Uneven belt stretch	Worn or badly manufactured pulley grooves Used belts mixed with new belts on the drive Belts from different manufacturers used on same drive	Replace pulleys Replace with a completely new set of belts Belt sets must comprise belts from one manufacturer only – optibelt S=C Plus, optibelt SUPER TX M=S, optibelt SUPER X-POWER M=S

Should other problems occur, please contact our Application Engineering Department. They will require comprehensive technical details in order to provide you with solutions.

DESIGN SUPPORT
LENGTH MEASUREMENT CONDITIONS AND CONVERSION FACTORS

Belt length measurement
The belt is placed over two identically sized measuring pulleys of the groove design shown in the following drawings. The dimensions are given in the tables 85 to 91 on pages 169/170.

By moving to the adjustable pulley the force Q is applied on the belt. Before measuring the drive centre distance a, the belt should be rotated three times under load. This ensures that the belt is well seated in the pulley, an essential pre-condition for the accuracy of the resulting measurement.

The length is obtained by adding the diameter of the pulley to twice the drive centre distance a.

$$L_d = 2\,a + U_d$$

$$L_a = 2\,a + U_a$$

Length conversion factors are given in the tables on pages 169/170 and 173/174.

Arrangement for measuring belt length

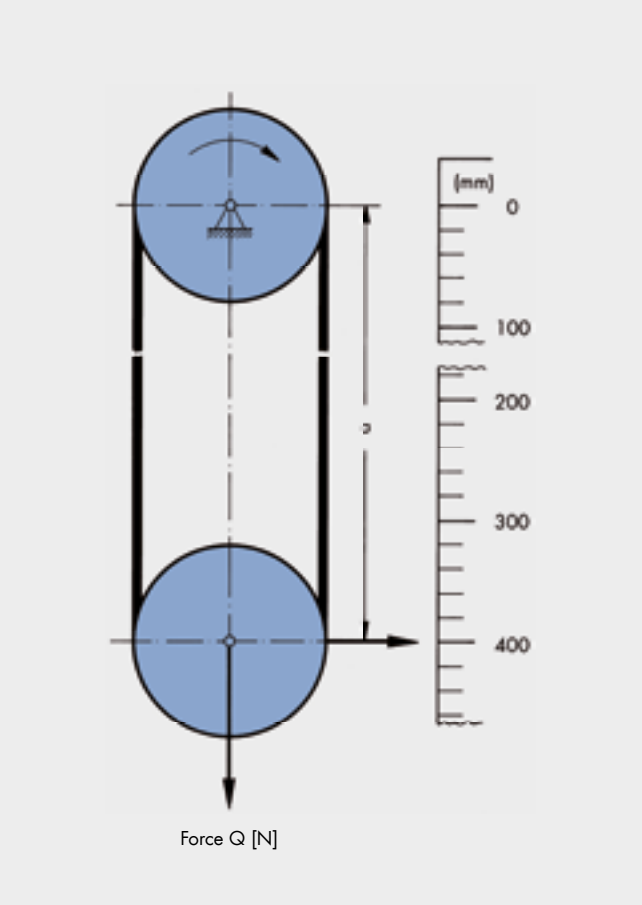

Measuring pulley for wedge belts DIN 7753 Part 1 and classic V-belts DIN 2215

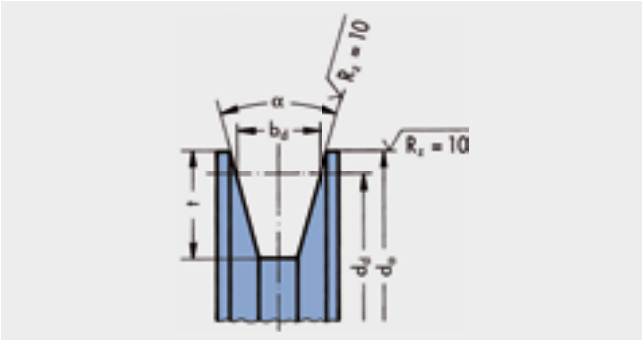

Measuring pulley for wedge belts ARPM/MPTA

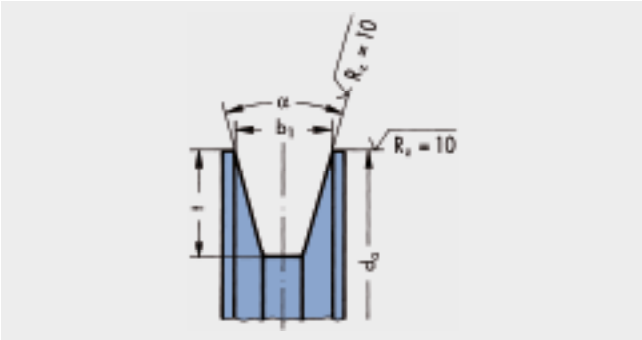

Measuring pulley for kraftbands

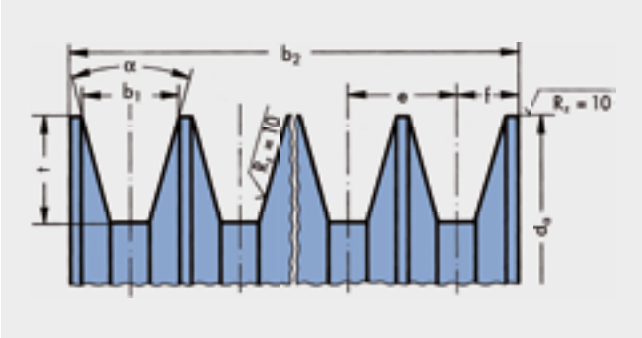

Measuring pulley for double-sided V-belts

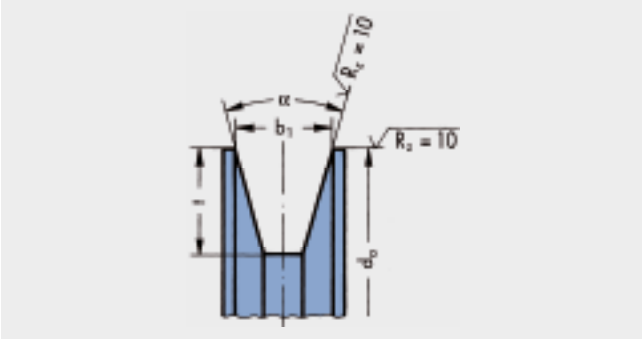

 © ARNTZ OPTIBELT GROUP, GERMANY

DESIGN SUPPORT
LENGTH MEASUREMENT CONDITIONS AND CONVERSION FACTORS

Table 85: optibelt SK high performance wedge belts
optibelt SUPER X-POWER M=S wedge belts – raw edge, cogged
optibelt SUPER E-POWER M=S high performance wedge belts – raw edge, cogged
Measuring pulleys and force according to DIN 7753 Part 1 and ISO 4183

Profile	Datum circumference $U_d = d_d \cdot \pi$	Datum diameter d_d ± 0.05	Outside diameter d_a ± 0.05	Datum width b_d	Groove angle α° ± 10′	Groove depth t_{min}	Measuring force Q [N]	Outside length L_a [mm]	Inside length L_i [mm]
SPZ; XPZ	300	95.49	100	8.50	36	11	360	$L_a \approx L_d + 13$ $L_a \approx L_i + 51$	$L_i \approx L_d - 38$ $L_i \approx L_a - 51$
SPA; XPA	450	143.24	149	11.00	36	14	560	$L_a \approx L_d + 18$ $L_a \approx L_i + 63$	$L_i \approx L_d - 45$ $L_i \approx L_a - 63$
SPB; XPB	600	190.99	198	14.00	36	18	900	$L_a \approx L_d + 22$ $L_a \approx L_i + 82$	$L_i \approx L_d - 60$ $L_i \approx L_a - 82$
SPC; XPC	1000	318.31	328	19.00	36	24	1500	$L_a \approx L_d + 30$ $L_a \approx L_i + 113$	$L_i \approx L_d - 83$ $L_i \approx L_a - 113$

Table 86: optibelt SK high performance wedge belts
optibelt SUPER X-POWER M=S wedge belts – raw edge, cogged
optibelt SUPER E-POWER M=S high performance wedge belts – raw edge, cogged
Measuring pulleys and force according to ARPM/MPTA

Profile	Outside circumference $U_a = d_a \cdot \pi$	Outside diameter d_a ± 0.13	Upper groove width b_1 ± 0.13	Groove angle α° ± 15′	Groove depth t_{min}	Measuring force Q [N]	Inside length L_i [mm]
3V/9N; 3VX/9NX	300	95.50	8.90	38	9.00	445	$L_i \approx L_a - 42$
5V/15N; 5VX/15NX	600	191.00	15.24	38	15.00	1000	$L_i \approx L_a - 71$
8V/25N	1000	318.30	25.40	38	25.50	2225	$L_i \approx L_a - 120$

Table 87: optibelt VB classic V-belts
optibelt SUPER TX M=S classic V-belts – raw edge, cogged
Measuring pulleys and force according to DIN 2215 und ISO 4183

Profile	Datum circumference $U_d = d_d \cdot \pi$	Datum diameter d_d ± 0.05	Outside diameter d_a ± 0.05	Datum width b_d	Groove angle α° ± 10′	Groove depth t_{min}	Measuring force Q [N]	Outside length L_a [mm]	Datum length L_d [mm]
5	70	22.28	24.88	4.20	32	5	30	$L_a \approx L_i + 19$ $L_a \approx L_d + 8$	$L_d \approx L_i + 11$ $L_d \approx L_a - 8$
Y/6	90	28.65	31.85	5.30	32	6	40	$L_a \approx L_i + 25$ $L_a \approx L_d + 10$	$L_d \approx L_i + 15$ $L_d \approx L_a - 10$
8	140	44.56	48.56	6.70	32	8	80	$L_a \approx L_i + 31$ $L_a \approx L_d + 12$	$L_d \approx L_i + 19$ $L_d \approx L_a - 12$
Z/10; ZX/X10	180	57.30	62.30	8.50	34	10	110	$L_a \approx L_i + 38$ $L_a \approx L_d + 16$	$L_d \approx L_i + 22$ $L_d \approx L_a - 16$
A/13; AX/X13	300	95.50	102.10	11.00	34	12	200	$L_a \approx L_i + 50$ $L_a \approx L_d + 20$	$L_d \approx L_i + 30$ $L_d \approx L_a - 20$
B/17; BX/X17	400	127.32	135.72	14.00	34	15	300	$L_a \approx L_i + 69$ $L_a \approx L_d + 29$	$L_d \approx L_i + 40$ $L_d \approx L_a - 29$
20	520	165.52	175.12	17.00	34	18	750	$L_a \approx L_i + 79$ $L_a \approx L_d + 31$	$L_d \approx L_i + 50$ $L_d \approx L_a - 31$
C/22; CX/X22	700	222.82	234.22	19.00	34	20	750	$L_a \approx L_i + 88$ $L_a \approx L_d + 30$	$L_d \approx L_i + 58$ $L_d \approx L_a - 30$
25	800	254.65	267.25	21.00	34	22	750	$L_a \approx L_i + 100$ $L_a \approx L_d + 39$	$L_d \approx L_i + 60$ $L_d \approx L_a - 39$
D/32	1000	318.31	334.52	27.00	36	28	1400	$L_a \approx L_i + 126$ $L_a \approx L_d + 51$	$L_d \approx L_i + 75$ $L_d \approx L_a - 51$
E/40	1800	572.96	596.96	32.00	36	36	1800	$L_a \approx L_i + 157$ $L_a \approx L_d + 77$	$L_d \approx L_i + 80$ $L_d \approx L_a - 77$

DESIGN SUPPORT
LENGTH MEASUREMENT CONDITIONS AND CONVERSION FACTORS

Table 88: optibelt KB kraftbands with high performance wedge belts
Measuring pulleys and force

Profile	Outside circumference $U_a = d_a \cdot \pi$	Outside diameter d_a ± 0.13	Upper groove width b_1 ± 0.13	Groove angle $\alpha°$ ± 15′	Groove depth t_{min}	Groove pitch e	Tolerance e[1)]	Σ Tol. e[2)]	Force per rib Q [N]	Inside length L_i [mm]
3V/9J	300	95.50	8.90	38	9.00	10.30	± 0.25	± 0.5	445	$L_i \approx L_a - 42$
5V/15J	600	191.00	15.20	38	15.00	17.50	± 0.25	± 0.5	1000	$L_i \approx L_a - 71$
8V/25J	1000	318.30	25.40	38	25.50	28.60	± 0.40	± 0.8	2225	$L_i \approx L_a - 120$

Table 89: optibelt KB kraftbands
Measuring pulleys and force

Profile	Datum circumference $U_d = d_d \cdot \pi$	Datum diameter d_d ± 0.13	Outside diameter d_a ± 0.13	Datum width b_d	Groove angle $\alpha°$ ± 15′	Groove depth t_{min}	Groove pitch e	Tolerance e[1)]	Σ Tol. e[2)]	Force per rib Q [N]	Datum length L_d [mm]
SPZ	300	95.49	100.00	8.50	36	11.00	12.00	± 0.30	± 0.5	360	$L_d \approx L_a - 13$
SPA	450	143.24	149.00	11.00	36	14.00	15.00	± 0.30	± 0.5	560	$L_d \approx L_a - 18$
SPB	600	190.99	198.00	14.00	36	18.00	19.00	± 0.40	± 0.8	900	$L_d \approx L_a - 22$
SPC	1000	318.31	328.00	19.00	36	24.00	25.50	± 0.40	± 0.8	1500	$L_d \approx L_a - 30$

Table 90: optibelt KB kraftbands with classic V-belts
Measuring pulleys and force

Profile	Outside circumference $U_a = d_a \cdot \pi$	Outside diameter d_a ± 0.13	Upper groove width b_1 ± 0.13	Groove angle $\alpha°$ ± 15′	Groove depth t_{min}	Groove pitch e	Tolerance e[1)]	Σ Tol. e[2)]	Force per rib Q [N]	Inside length L_i [mm]
A/HA	254	80.85	12.45	32	12.50	15.88	± 0.38	± 0.8	300	$L_i \approx L_a - 36$
B/HB	381	121.28	16.00	32	14.50	19.05	± 0.38	± 0.8	450	$L_i \approx L_a - 62$
C/HC	635	202.13	22.33	34	20.00	25.40	± 0.38	± 0.8	850	$L_i \approx L_a - 75$
D/HD	889	282.96	31.98	34	28.00	36.53	± 0.38	± 0.8	1000	$L_i \approx L_a - 111$

1) Tolerance for the medium distance e between two adjacent grooves
2) Sum of all deviations from the nominal size e for all groove distances on one pulley must not exceed the given values.

Table 91: optibelt DK double-sided V-belts
Measuring pulleys and force according to ISO 5289

Profile	Outside circumference $U_a = d_a \cdot \pi$	Outside diameter d_a	Upper groove width b_1	Groove angle $\alpha°$ ± 20′	Groove depth t_{min}	Measuring force Q [N]
AA/HAA	300	95.49	12.60	34	8	300
BB/HBB	400	127.32	16.20	34	10	450
CC/HCC	600	190.99	22.30	34	14	850
DD/HDD	900	286.48	32.00	34	20	1400
22 x 22	600	190.99	22.30	34	14	750
25 x 22	942	300.00	25.00	34	22	1200

 © ARNTZ OPTIBELT GROUP, GERMANY

Table 92: Endless wedge belts DIN 7753 Part 1

Profile	Datum length [mm]	Length tolerance [mm] Allowed deviation of the datum lengths		Set tolerances [mm] Allowed deviation between datum lengths L_d of the belts in one and the same set on multi-grooved belt drives			
		Optibelt		Optibelt		DIN 7753/ISO 4184	
		wrapped	DIN 7753	wrapped	raw edge	wrapped	raw edge
SPZ/XPZ SPA/XPA SPB/XPB SPC/XPC	> 630 ≤ 900	DIN	± 6 to ± 9	2	2	2	2
	> 900 ≤ 1250	DIN	± 9 to ± 12	2	4	2	4
	> 1250 ≤ 2000	± 2	± 12 to ± 20	± 2	6	2	6
	> 2000 ≤ 3150	± 2	± 20 to ± 32	± 2	6	4	6
	> 3150 ≤ 5000*	± 2	± 32 to ± 50	± 2	10*	6	10*
	> 5000 ≤ 8000	± 4	± 50 to ± 80	± 4		10	
	> 8000 ≤ 10000	± 6	± 80 to ± 100	± 6		16	
	> 10000 ≤ 12500	± 8	± 100 to ± 125	± 8			

Table 93: Classic V-belts DIN 2215

Profile	Datum length [mm]	Length tolerance [mm] Allowed deviation of the datum lengths		Set tolerances [mm] Allowed deviation between datum lengths L_d of the belts in one and the same set on multi-grooved belt drives			
		Optibelt		Optibelt		DIN 2215/ISO 4184	
		wrapped	DIN 2215	wrapped	raw edge	wrapped	raw edge
5 Y/6 8 Z/10; ZX/X10 A/13; AX/X13 B/17; BX/X17 20 C/22; CX/X22 25 D/32 E/40	≤ 250	DIN	+ 8/– 4	2		2	2
	> 250 ≤ 315	DIN	+ 9/– 4	2		2	2
	> 315 ≤ 400	DIN	+ 10/– 5	2		2	2
	> 400 ≤ 500	DIN	+ 11/– 6	2		2	2
	> 500 ≤ 630	DIN	+ 13/– 6	2	2	2	2
	> 630 ≤ 800	DIN	+ 15/– 7	2	2	2	2
	> 800 ≤ 900	DIN	+ 17/– 8	2	2	2	2
	> 900 ≤ 1250	DIN	+ 19/– 10	4	4	4	4
	> 1250 ≤ 1600	± 2	+ 23/– 11	± 2	4	4	4
	> 1600 ≤ 2000	± 2	+ 27/– 13	± 2	4	4	4
	> 2000 ≤ 2500	± 2	+ 31/– 16	± 2	6	8	8
	> 2500 ≤ 3150	± 2	+ 37/– 18	± 2	8	8	8
	> 3150 ≤ 4000*	± 2	+ 44/– 22	± 2	8*	12	12*
	> 4000 ≤ 5000	± 2	+ 52/– 26	± 2		12	
	> 5000 ≤ 6300	± 4	+ 63/– 32	± 4		20	
	> 6300 ≤ 8000	± 4	+ 77/– 38	± 4		20	
	> 8000 ≤ 10000	± 6	+ 93/– 46	± 6		32	
	> 10000 ≤ 12500	± 8	+ 112/– 56	± 8		32	
	> 12500 ≤ 15000	DIN	+ 140/– 70	DIN		48	
	> 15000 ≤ 20000	DIN	+ 170/– 85	DIN		48	

* Maximum production length for raw edge V-belts ≤ 3550 mm

optibelt S=C Plus and optibelt M=S V-belts can be used in sets without measuring.

Table 94: Endless wedge belts ARPM/MPTA

Profile	Length designation	Outside length [mm]	Length tolerance [mm] Allowed deviation from outside lengths Replace complete belt sets!		Set tolerance [mm] Allowed deviation between the outside lengths La of the belts in one and the same set on multi-grooved belt drives Replace complete belt sets!		
			Optibelt wrapped	ARPM/MPTA	Optibelt wrapped	Optibelt raw edge	ARPM/MPTA
3V/9N 3VX/9NX 5V/15N 5VX/15NX 8V/25N	265 ≤ 500	673 ≤ 1 270	acc. ARPM/MPTA	± 8	4	4	4
	530	1 346	± 2	± 10	± 2	4	4
	560	1 422	± 2	± 10	± 2	6	6
	600 ≤ 800	1 524 ≤ 2 032	± 2	± 10	± 2	6	6
	800 ≤ 1 000	2 032 ≤ 2 540	± 2	± 13	± 2	6	6
	1 000 ≤ 1 060	2 540 ≤ 2 692	± 2	± 15	± 2	6	6
	1 120 ≤ 1 400	2 845 ≤ 3 556	± 2	± 15	± 2	10*	10
	1 500 ≤ 1 900	3 810 ≤ 4 826	± 2	± 20	± 2		10
	2 000 ≤ 2 360	5 080 ≤ 5 994	± 4	± 20	± 4		10
	2 500 ≤ 3 000	6 350 ≤ 7 620	± 4	± 20	± 4		16
	3 150 ≤ 3 750	8 001 ≤ 9 525	± 6	± 25	± 6		16
	4 000	10 160	± 8	± 25	± 8		16
	4 250 ≤ 4 500	10 795 ≤ 11 430	± 8	± 30	± 8		16
	4 750 ≤ 5 000	12 065 ≤ 12 700	± 12	± 30	± 12		24

Table 95: Double-sided V-belts

Profile	Reference length [mm]	Length tolerance [mm] Allowed deviation of the reference lengths	Set tolerance [mm] Allowed deviation between the reference length of the double-sided V-belts in one and the same set on multi-grooved belt drives
AA/HAA BB/HBB CC/HCC DD/HDD 22 x 22 25 x 22	1 250 < 1 320	+ 8/– 16	4
	1 320 < 1 700	+ 9/– 18	4
	1 700 < 2 120	+ 11/– 22	5
	2 120 < 2 650	+ 13/– 26	6.3
	2 650 < 3 350	+ 15/– 30	8
	3 350 < 4 250	+ 18/– 36	10
	4 250 < 5 300	+ 22/– 44	12.5
	5 300 < 6 700	+ 26/– 52	16
	6 700 < 8 500	+ 32/– 64	20
	8 500 < 10 000	+ 39/– 78	25

Table 96: Kraftbands with high performance wedge belts and classic V-belts

Profile	Length and set tolerances
3V/9J; 3VX/9JX 5V/15J; 5VX/15JX 8V/25J	see table 94, ARPM/MPTA
SPZ; SPA; SPB; SPC	see table 92, DIN/ISO
A/HA B/HB C/HC D/HD	DIN/ASAE

* Maximum production length for raw edge V-belts ≤ 3550 mm

 © ARNTZ OPTIBELT GROUP, GERMANY

TABLES
CONVERSION FACTORS

optibelt SK high performance wedge belts DIN 7753 Part 1

Profile	Cross-section b x h ≈	Bottom belt width b_u ≈	Nominal width b_d	Belt length: Nominal length	Belt length: Outside length L_a	Belt length: Pitch length L_d	Belt length: Inside length L_i	Recommended minimum pulley diameter [mm]		Meter weight [≈ kg/m]
SPZ	9.7 x 8	4.2	8.5	Nominal length L_d	$L_a \approx L_d + 13$ $L_a \approx L_i + 51$	–	$L_i \approx L_d - 38$ $L_i \approx L_a - 51$	Nominal diameter d_d	63	0.074
SPA	12.7 x 10	5.8	11.0		$L_a \approx L_d + 18$ $L_a \approx L_i + 63$	–	$L_i \approx L_d - 45$ $L_i \approx L_a - 63$		90	0.123
SPB	16.3 x 13	7.3	14.0		$L_a \approx L_d + 22$ $L_a \approx L_i + 82$	–	$L_i \approx L_d - 60$ $L_i \approx L_a - 82$		140	0.195
SPC	22.0 x 18	9.6	19.0		$L_a \approx L_d + 30$ $L_a \approx L_i + 113$	–	$L_i \approx L_d - 83$ $L_i \approx L_a - 113$		224	0.377

optibelt SK high performance wedge belts ARPM/MPTA

3V/9N	9.0 x 8	4.2	–	Outside length L_a	–	$L_d \approx L_a - 4$*	$L_i \approx L_a - 42$	Outside diameter d_a	67	0.074
5V/15N	15.0 x 13	7.3	–		–	$L_d \approx L_a - 11$*	$L_i \approx L_a - 71$		151	0.195
8V/25N	25.0 x 23	9.6	–		–	–	$L_i \approx L_a - 120$		315	0.575

* The conversion factor L_d to L_a is used when a profile according to DIN 7753 Part 1 is to be replaced by the corresponding profile according to ARPM/MPTA.

optibelt SUPER X-POWER M=S wedge belts – raw edge, cogged – DIN 7753 Part 1
optibelt SUPER E-POWER M=S high performance wedge belts – raw edge, cogged – DIN 7753 Part 1

XPZ	9.7 x 8	4.2	8.5	Nominal length L_d	$L_a \approx L_d + 13$ $L_a \approx L_i + 51$	–	$L_i \approx L_d - 38$ $L_i \approx L_a - 51$	Nominal diameter d_d	56	0.065
XPA	12.7 x 10	5.8	11.0		$L_a \approx L_d + 18$ $L_a \approx L_i + 63$	–	$L_i \approx L_d - 45$ $L_i \approx L_a - 63$		71	0.111
XPB	16.3 x 13	7.3	14.0		$L_a \approx L_d + 22$ $L_a \approx L_i + 82$	–	$L_i \approx L_d - 60$ $L_i \approx L_a - 82$		112	0.183
XPC	22.0 x 18	9.6	19.0		$L_a \approx L_d + 30$ $L_a \approx L_i + 113$	–	$L_i \approx L_d - 83$ $L_i \approx L_a - 113$		180	0.340

optibelt SUPER X-POWER M=S wedge belts – raw edge, cogged – ARPM/MPTA
optibelt SUPER E-POWER M=S high performance wedge belts – raw edge, cogged – ARPM/MPTA

3VX/9NX	9.0 x 8	4.2	–	Outside length L_a	–	$L_d \approx L_a - 4$*	$L_i \approx L_a - 42$	Outside diameter d_a	56	0.065
5VX/15NX	15.0 x 13	7.3	–		–	$L_d \approx L_a - 11$*	$L_i \approx L_a - 71$		112	0.183

* The conversion factor L_d to L_a is used when a profile according to DIN 7753 Part 1 is to be replaced by the corresponding profile according to ARPM/MPTA.

optibelt SUPER TX M=S V-belts – raw edge, cogged

ZX/X10	10.0 x 6	5.9	8.5	Nominal length L_d	$L_a \approx L_i + 38$ $L_a \approx L_d + 16$	–	$L_i \approx L_d - 22$ $L_i \approx L_a - 38$	Nominal diameter d_d	40	0.062
AX/X13	13.0 x 8	7.5	11.0		$L_a \approx L_i + 50$ $L_a \approx L_d + 20$	–	$L_i \approx L_d - 30$ $L_i \approx L_a - 50$		63	0.099
BX/X17	17.0 x 11	9.4	14.0		$L_a \approx L_i + 69$ $L_a \approx L_d + 29$	–	$L_i \approx L_d - 40$ $L_i \approx L_a - 69$		90	0.165
CX/X22	22.0 x 14	12.3	19.0		$L_a \approx L_i + 88$ $L_a \approx L_d + 30$	–	$L_i \approx L_d - 58$ $L_i \approx L_a - 88$		140	0.276

optibelt VB classic V-belts DIN 2215

5	5.0 x 3	2.8	4.2	Nominal length L_d	$L_a \approx L_i + 19$ $L_a \approx L_d + 8$	$L_d \approx L_i + 11$ $L_d \approx L_a - 8$	–	Nominal diameter d_d	20	0.018
Y/6	6.0 x 4	3.3	5.3		$L_a \approx L_i + 25$ $L_a \approx L_d + 10$	$L_d \approx L_i + 15$ $L_d \approx L_a - 10$	–		28	0.026
8	8.0 x 5	4.5	6.7		$L_a \approx L_i + 31$ $L_a \approx L_d + 12$	$L_d \approx L_i + 19$ $L_d \approx L_a - 12$	–		40	0.042
Z/10	10.0 x 6	5.9	8.5		$L_a \approx L_i + 38$ $L_a \approx L_d + 16$	$L_d \approx L_i + 22$ $L_d \approx L_a - 16$	–		50	0.064
A/13	13.0 x 8	7.5	11.0		$L_a \approx L_i + 50$ $L_a \approx L_d + 20$	$L_d \approx L_i + 30$ $L_d \approx L_a - 20$	–		71	0.109
B/17	17.0 x 11	9.4	14.0		$L_a \approx L_i + 69$ $L_a \approx L_d + 29$	$L_d \approx L_i + 40$ $L_d \approx L_a - 29$	–		112	0.196
20	20.0 x 12.5	11.4	17.0		$L_a \approx L_i + 79$ $L_a \approx L_d + 31$	$L_d \approx L_i + 50$ $L_d \approx L_a - 31$	–		160	0.266
C/22	22.0 x 14	12.3	19.0		$L_a \approx L_i + 88$ $L_a \approx L_d + 30$	$L_d \approx L_i + 58$ $L_d \approx L_a - 30$	–		180	0.324
25	25.0 x 16	14.0	21.0		$L_a \approx L_i + 100$ $L_a \approx L_d + 39$	$L_d \approx L_i + 60$ $L_d \approx L_a - 39$	–		250	0.420
D/32	32.0 x 20	18.2	27.0		$L_a \approx L_i + 126$ $L_a \approx L_d + 51$	$L_d \approx L_i + 75$ $L_d \approx L_a - 51$	–		355	0.668
E/40	40.0 x 25	22.8	32.0		$L_a \approx L_i + 157$ $L_a \approx L_d + 77$	$L_d \approx L_i + 80$ $L_d \approx L_a - 77$	–		500	0.958

TABLES
CONVERSION FACTORS

optibelt KB kraftbands with high performance wedge belts to ISO 5290/ARPM/MPTA

Profile	Height h ≈	Bottom belt width b_u ≈ of the single belt	Belt length				Recommended minimum pulley diameter [mm]		Meter weight per rib [≈ kg/m]
			Nominal length	Outside length L_a	Datum length L_d	Inside length L_i			
3V/9J	9.9	4.2	Outside length L_a	–	–	$L_i \approx L_a - 42$	Outside diameter d_a	84	0.122
5V/15J	15.1	7.3		–	–	$L_i \approx L_a - 71$		191	0.252
8V/25J	25.5	9.6		–	–	$L_i \approx L_a - 120$		355	0.693

optibelt KB kraftbands with high performance wedge belts

SPZ	10.5	5.4	Datum length L_d	$L_a \approx L_d + 13$	–	–	Datum diameter d_d	80	0.120
SPA	12.5	7.0		$L_a \approx L_d + 18$	–	–		112	0.166
SPB	15.6	8.8		$L_a \approx L_d + 22$	–	–		180	0.261
SPC	22.6	9.3		$L_a \approx L_d + 24$	–	–		250	0.555

optibelt KB kraftbands with classic V-belts

A	9.9	7.5	Datum length L_d	$L_a \approx L_i + 36$	$L_d \approx L_i + 30$	–	Datum diameter d_d	80	0.163
B	13.0	9.4		$L_a \approx L_i + 62$	$L_d \approx L_i + 40$	–		125	0.266
C	16.2	12.3		$L_a \approx L_i + 75$	$L_d \approx L_i + 58$	–		200	0.447
D	22.4	18.2		$L_a \approx L_i + 111$	$L_d \approx L_i + 75$	–		355	0.798

optibelt KB kraftbands according to USA standard ASAE S 211. ...

HA	9.9	7.5	Outside length L_a	–	–	$L_i \approx L_a - 36$	Outside diameter d_a	80	0.163
HB	13.0	9.4		–	–	$L_i \approx L_a - 62$		125	0.266
HC	16.2	12.3		–	–	$L_i \approx L_a - 75$		200	0.447
HD	22.4	18.2		–	–	$L_i \approx L_a - 111$		355	0.798

The width of the kraftband is dependent upon the number of ribs.

optibelt DK double-sided V-belts to DIN 7722 / ISO 5289

Profile	Cross-section b x h ≈	Bottom belt width b_u ≈	Nominal length	Belt length	Recommended minimum pulley diameter [mm]		Meter weight [≈ kg/m]
AA/HAA	13 x 10	–	Reference length	Reference length ≈ centre length – 4	Outside diameter d_a	80	0.150
BB/HBB	17 x 13	–		Reference length ≈ centre length – 8		125	0.250
CC/HCC	22 x 17	–		Reference length ≈ centre length + 3		224	0.440
DD/HDD	32 x 25	–		Reference length = centre length		355	0.935

optibelt DK double-sided V-belts – special profiles

22 x 22	22 x 22	–	Reference length	Reference length = centre length	Outside diameter d_a	280	0.511
25 x 22	25 x 22	–		Reference length = centre length		280	0.625

optibelt MARATHON 1 / optibelt MARATHON 2 M=S automotive V-belts

Profile	Cross-section b x h ≈	Bottom belt width b_u ≈	Nominal width b_d	Belt length			Recommended minimum pulley diameter [mm]	Meter weight [≈ kg/m]
				Nominal length	v L_d	Inside length L_i		
AVX 10/9.5	10 x 8	4.9	8.5	Outside length L_a	$L_d \approx L_a - 18$	$L_i \approx L_a - 51$	According to agreement and check with automotive industry	0.076
AVX 13/12.5	13 x 10	5.8	11.0		$L_d \approx L_a - 18$	$L_i \approx L_a - 63$		0.118
15A	16.6 x 10.4	9.2	–		$L_d \approx L_a - 0$	$L_i \approx L_a - 65$	76	0.139
17A	18.2 x 10.8	10.6	–		$L_d \approx L_a - 10$	$L_i \approx L_a - 68$	76	0.157
20A	21.4 x 12.4	12.6	–		$L_d \approx L_a - 20$	$L_i \approx L_a - 78$	89	0.236

 © ARNTZ OPTIBELT GROUP, GERMANY

CONVEYOR ELEMENTS
PRODUCT DESCRIPTION

Optibelt has developed a series of conveyor elements for the economical conveyance of goods in a varied range of applications.

- optibelt PKR — endless V-belts DIN 2215 with patterned top surfaces
- optibelt PKR — endless V-belts DIN 2215 with light coloured fabric cover and patterned top surfaces within the standard belt height
- optibelt KB — kraftbands with patterned top surfaces
- optibelt optimat PKR — open-ended V-belts DIN 2216 with patterned top surfaces
- optibelt optimat FK — open-ended conveyor belts, punched
- optibelt optimax HF — high performance flat belts

Construction/Quality
Optibelt conveyor elements consist of the basic belt and the top surface. These parts are specially connected via vulcanisation. The variety of applications required constructions with numerous patterns available in different qualities. Both pattern and surface quality should be adapted to the individual application.

Table 97

Type/ Colour	Temperature resistance [°C]	Hardness (Shore A)	Oil resist-ance	Loss of colour
SBR-NR/light	–40 to + 70	≈ 55*/65**	no	no
CR/black	–25 to +100	≈ 65	limited	yes

CR/black is available as standard. We would be pleased to inform you about the production of the other constructions.
SBR = Styrene-Butadiene-Rubber
NR = Natural Rubber
CR = Chloroprene Rubber
* ≈ 55 for top surfaces above the standard height
** ≈ 65 for top surfaces within the standard height

Properties
Special surfaced belts are used instead of expensive conventional type conveyor belts. They run individually, or in sets arranged adjacent to each other, transporting goods horizontally, or inclined up or down. Vertical conveying is also possible if the belts are arranged top surface to top surface, gripping the goods between them.

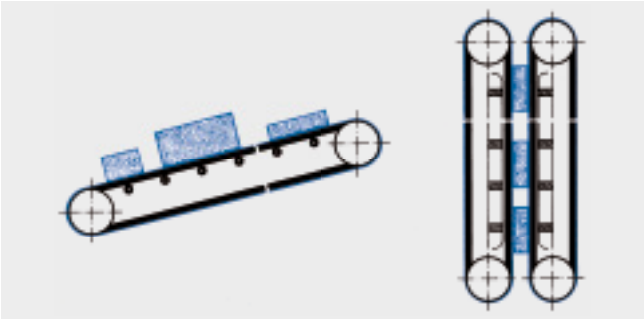

Applications areas
Here are just a few examples of the wide range of applications in which Optibelt conveyor belts are used successfully.

For the conveyance of:
- doors, cupboard parts, veneer and plastic panels in the woodworking industry
- body parts and sharp-edged sheet metal in the automotive industry
- cardboard and boxes in the packaging industry
- roof tiles, concrete slabs and block paving stones
- tiles
- flat glass
- postal items
- bowling balls on bowling lanes

In addition to the conveyance options, these belts are also used for
- labelling and sealing of tins and jars in the canning industry
- lifting, chopping and sorting of beet, potatoes, salad, cauliflower, Brussels sprouts and other vegetables in the agricultural industry

Due to their single belt characteristics and high surface load, optibelt KB kraftbands with patterned top surfaces are especially suitable in conveyor systems and lifting platforms for:
- the conveyance of cargo containers
- loading and clearing of airplanes and railway wagons
- stowing and unloading of ship cargos

optibelt KB with top surface

Drive and guide pulleys
The drive and guide pulleys should be V-grooved pulleys. The minimum diameters should be selected according to the standard recommendations for V-belts and kraftbands. See the chapter on V-grooved pulleys.
Due to the relatively low transporting speed (experience has shown that it is usually less than 1m/s) and the resulting low flex rate, pulley diameters can be reduced to approximately 10% below the recommended minimum. With greater reduction, there is danger that the top surface separates from the V-belt base.
The driver pulley should be arranged at the discharge end of the conveyor so that the goods are pulled along.

Support idlers/tracks
In most cases, support idlers or tracks are required to prevent the belt from sagging under load.
Support idlers may be flat faced or V-grooved pulleys. The dimensions of the pulley grooves should support the base of the conveyor belt in the base of the groove so only one edge can run on the groove flank, and thus cannot get stuck in the groove.

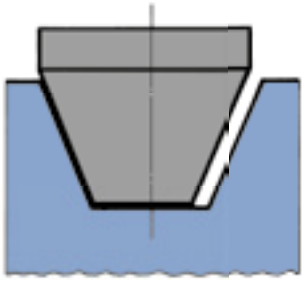

The diameter and the number of support idlers required depend on the length of the conveying span and the weight and size of the goods to be conveyed.
Supporting tracks, generally made of plastic, are either flat or with a key seat to improve guidance of the conveyor belt. As with the support idlers, the grooves must have an adequate width.

Adjustment of the drive centre distance allowances
The tables on pages 82 to 84 show the drive centre distance allowances for special purpose conveyor belts and kraftbands.

Tensioning options
An adequate belt tension is essential to the reliable operation of the conveyor system. Tension is applied by adjusting the drive centre distance or, when the centres are fixed, by tension idlers.

When idlers are employed, they should be arranged inside the belt if possible, as otherwise the alternating flexing of the belt will reduce its service life.

optibelt KB KRAFTBANDS WITH PATTERNED TOP SURFACE

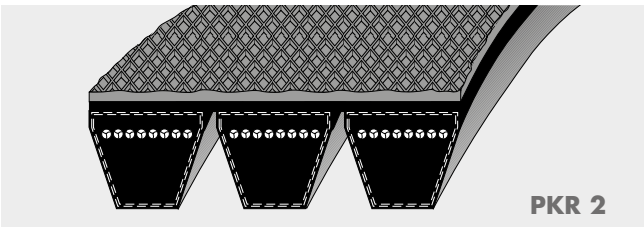

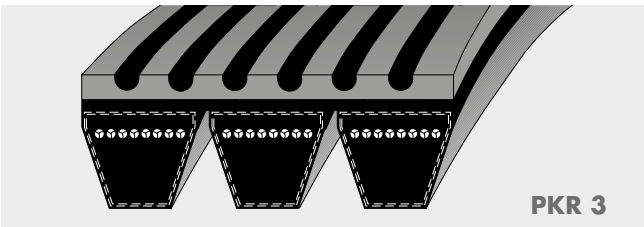

Pattern type	Top surface height standard [mm]	Top surface height maximum [mm]	Pitch [mm]	Groove width [mm]
PKR 0	3	5	–	–
PKR 1	3	5	10	–
PKR 2	3	5	–	–
PKR 3	5	–	–	3.7

Type/Colour	Temperature resistance [°C]	Hardness (Shore A)	Oil resistance	Loss of colour
SBR-NR/light	–40 to + 70	≈ 55	no	no
CR/black	–25 to +100	≈ 65	limited	yes

SBR = Styrene-Butadiene-Rubber
NR = Natural Rubber
CR = Chloroprene Rubber

Table 98

Profile	Cross-sectional dimensions of the belt [mm]	Kraftband height without top surface [mm]	Length designation	Length [mm]	Maximum production length [mm]	Pattern type PKR 0	PKR 1	PKR 2	PKR 3
3V/9J	9 x 8	9.9	500 ≤ 1400	1400 ≤ 3556 L_a	4250	•	•	•	–
5V/15J	15 x 13	15.1	500 ≤ 3550	1400 ≤ 9017 L_a	10000	•	•	•	–
8V/25J	25 x 23	25.5	1000 ≤ 4750	2540 ≤ 12065 L_a	15000	•	•	•	–
SPB	16.3 x 13	15.6	–	2400 ≤ 6000 L_d	6000	•	•	•	–
A/HA	13 x 8	9.9	–	1400 ≤ 5000 L_i	8000	•	•	•	–
				2850 ≤ 8000 L_i	on request	–	–	–	•
B/HB	17 x 11	13.0	–	1400 ≤ 7100 L_i	10000	•	•	•	–
C/HC	22 x 14	16.2	–	2286 ≤ 7100 L_i	12000	•	•	•	–

L_a = outside length; L_i = inside length; L_d = datum length

Product Range: see pages 38/39. Minimum order quantities: on request.

 © ARNTZ OPTIBELT GROUP, GERMANY

CONVEYOR ELEMENTS

optibelt PKR ENDLESS V-BELTS AND optibelt KB KRAFTBANDS WITH PATTERNED TOP SURFACE

Table 99

Pattern types	Top surface height standard [mm]	Top surface height maximum [mm]	Pitch [mm]	Groove width [mm]
PKR 0	3	5	–	–
PKR 1	3	5	10	–
PKR 2	3	5	–	–
PKR 5	5	–	13	–

Table 100

Type/Colour	Temperature resistance [°C]	Hardness (Shore A)	Oil resistance	Loss of colour
SBR-NR/light	–40 to + 70	≈ 55*/65**	no	no
CR/black	–25 to +100	≈ 65	limited	yes

SBR = Styrene-Butadiene-Rubber
NR = Natural Rubber * ≈ 55 for top surfaces above the standard height
CR = Chloroprene Rubber ** ≈ 65 for top surfaces within the standard height

Table 101

Top surfaces **above** the standard height							Top surfaces 3 or 5 mm above the standard height	
Profile	Standard height [mm]	Standard insight length range [mm]	Pattern Type PKR 0	PKR 1	PKR 2	PKR 5	Minimum order quantities for V-belts with patterned top surface **PKR 0; PKR 1; PKR 2; PKR 5** **for standard range** (as listed on pages 30 to 33)	**for non-standard length ranges** (sizes not included in this manual)
A/13	8.0	1 200 ≤ 5 000[1]	•	•	•	–	18 pieces	31 pieces
B/17	11.0	1 200 ≤ 2 000[1] 2 001 ≤ 7 100[1]	• •	• •	• •	– –	15 pieces 15 pieces	50 pieces 42 pieces
20	12.5	1 850 ≤ 2 000[2] 2 001 ≤ 8 000[2]	• •	• •	• •	– –	13 pieces 13 pieces	21 pieces 36 pieces
C/22	14.0	1 850 ≤ 2 000[2] 2 001 ≤ 10 000[2]	• •	• •	• •	– –	12 pieces 12 pieces	57 pieces 48 pieces
25	16.0	1 850 ≤ 2 000[2] 2 001 ≤ 10 000[2]	• •	• •	• •	– –	11 pieces 11 pieces	51 pieces 42 pieces
D/32	20.0	2 850 ≤ 12500[2] 2 850 ≤ 12 500[2]	• –	• –	• –	– •[3]	9 pieces 8 pieces	22 pieces 8 pieces
E/40	25.0	–	–	–	–	–	on request	on request

1) Maximum production length on request
2) Maximum production length 21,000 mm
3) Only available in CR/black
Profile Z/10 on request

Table 102

Top surfaces **within** the standard height			
Standard insight length range [mm]	Pattern Type PKR 0	PKR 2	Minimum quantity
3 550 ≤ 10 000[1]	•	•	10
2 850 ≤ 21 000[1]	•	•	10
3 550 ≤ 21 000[1]	•	•	8
3 550 ≤ 21 000[1]	•	•	8
2 850 ≤ 21 000[1]	•	•	8
2 850 ≤ 21 000[1]	•	•	6
4 000 ≤ 21 000[1]	•	•	5

When ordering please give the overall height of the V-belt including top surface. For this purpose, you need the designation of the profile described as follows:

Profile B/17 – top surface within the standard height = 17 x 11
Profile B/17 – with additional 3 mm top surface = 17 x 14
Profile B/17 – with additional 5 mm top surface = 17 x 16

CONVEYOR ELEMENTS

optimat PKR OPEN-ENDED V-BELTS DIN 2216 WITH PATTERNED TOP SURFACE

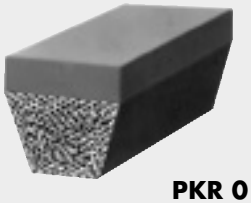

PKR 0

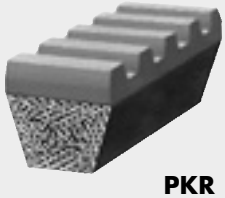

PKR 1

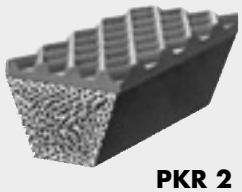

PKR 2

Table 103

Profile	PKR 0 CR/red-brown		PKR 0 SBR-NR/light		PKR 1		PKR 2	
	S	P	S	P	S	P	S	P
Z/10	•	•	–	–	–	–	–	–
A/13	•	•	•	•	•	•	•	•
B/17	•	•	•	•	•	•	•	•
C/22	•	•	•	•	•	•	•	•
25	•	•	•	•	•	•	•	•
D/32	•	•	•	•	•	•	–	–

S = standard; P = polyester

Table 104

Pattern types	Top surface height		Pitch
	standard [mm]	max. [mm]	[mm]
PKR 0	2	3	–
PKR 1 A/13; B/17; C/22	3	3	10
PKR 1 25; D/32	5	5	10
PKR 2	3	–	–

Table 105

Type/Colour	Temperature resistance [°C]	Hardness (Shore A)	Oil resistance	Loss of colour
PKR 0				
CR/red brown	–25 to +100	≈ 50	limited	no
SBR-NR/light	–40 to + 70	≈ 45	no	no
PKR 1 and PKR 2				
NR/red brown	–40 to + 70	≈ 48	no	no
SBR-NR/light	–40 to + 70	≈ 45	no	no
CR/red brown	–25 to +100	≈ 50	limited	no
CR/black	–25 to +100	≈ 68	limited	yes

 © ARNTZ OPTIBELT GROUP, GERMANY

CONVEYOR ELEMENTS

optibelt RR ROUND BELTS, optibelt KK PLASTIC BELTS

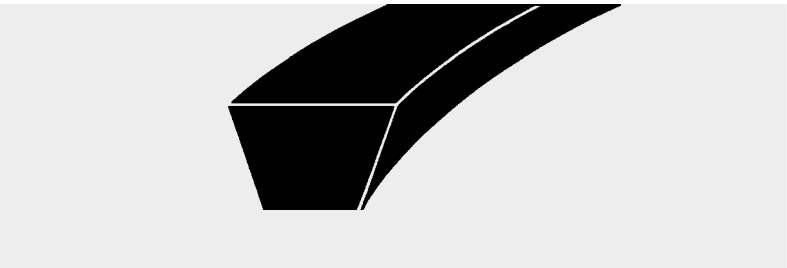

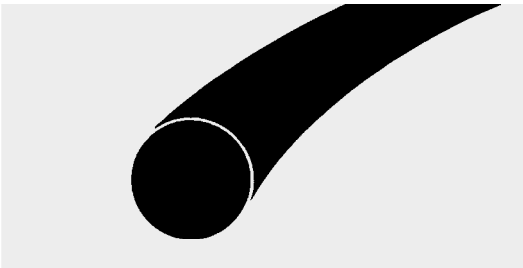

Profile	Width x Height [mm]	Roll length [m]
8	8 x 5	50
Z/10	10 x 6	50
A/13	13 x 8	50
B/17	17 x 11	50
C/22	22 x 14	25

Diameter [mm]	Roll length [m]	Weight [≈ kg/m]
2	200	0.004
3	200	0.009
4	200	0.016
5	200	0.024
6	100	0.035
7	100	0.048
8	100	0.064
10	100	0.096
12	50	0.132
15	50	0.211

optibelt RR round belts and optibelt KK plastic belts are especially suitable as conveyor elements in the food industry, ceramic industry, and for applications in contact with oil and chemicals.
They can also be used as drive elements for specific capacity ranges.
Optibelt supplies different qualities that can be easily distinguished due to their different colours.

Minimum lengths for endless connection:

Round belts:		200 mm
V-belts:	Profile Z/10 to A/13:	300 mm
	Profile B/17:	500 mm
	Profile C/22:	700 mm

optibelt KK PLASTIC V-BELTS WITH PATTERNED TOP SURFACE (WHITE, 92 SHORE A) PLASTIC V-BELTS WITH POINTED ROOF PROFILE

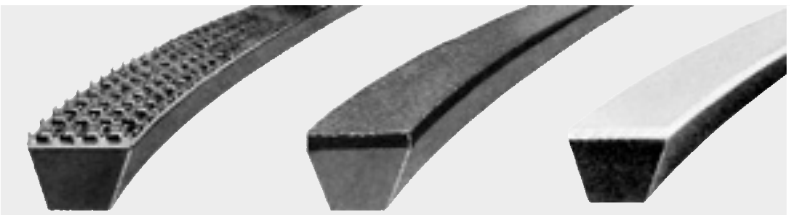

Supergrip Linatex HV-2-Laminate

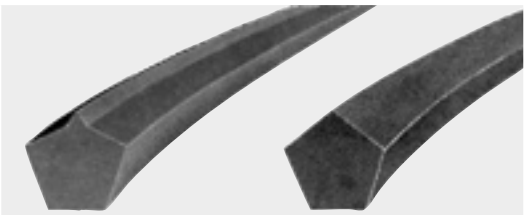

Form 1 Form 2

Profile	Width x Height [mm]	Roll length [m]
8	8 x 5	50
Z/10	10 x 6	50
A/13	13 x 8	50
B/17	17 x 11	50
C/22	22 x 14	25

Form	Profile	Roll length [m]
1	A/13	25
2	A/13	25
1	B/17	25
2	B/17	25
1	C/22	25
2	C/22	25

ANNEX
OVERVIEW OF STANDARDS

Federal Republic of Germany

DIN 109 Sheet 1 – Drive Elements; Circumferential Speeds
DIN 109 Sheet 2 – Drive Elements; Centre Distances for V-Belt Drives
DIN 111 – Pulleys for Flat Transmission Belts; Dimensions, Nominal Torques
DIN 111 Sheet 2 – Pulleys for Flat Transmission Belts; Classification for Electrical Machines
DIN 2211 Sheet 1 – Grooved Pulleys for Narrow V-Belts; Dimensions, Materials
DIN 2211 Sheet 2 – Grooved Pulleys for Narrow V-Belts; Inspections of Grooves
DIN 2211 Sheet 3 – Grooved Pulleys for Narrow V-Belts; Classification for Electrical Machines
DIN 2215 – Endless V-Belts, Classical Profiles; Minimum Datum Diameter of the Pulleys, Internal and Datum Belt Length
DIN 2216 – Open-Ended V-Belts; Dimensions
DIN 2217 Sheet 1 – V-Belt Pulleys for Classical Profiles; Dimensions, Materials
DIN 2217 Sheet 2 – V-Belt Pulleys for Classical Profiles; Inspections of Grooves
DIN 2218 – Endless V-Belts, Classic Profiles for Mechanical Engineering; Calculation of Drives, Performance Data
DIN 7716 – Rubber Products; Requirements for Storage, Cleaning and Maintenance
DIN 7719 Part 1 – Endless Wide V-Belts for Industrial Speed Changers; Belts and Groove Profiles for Corresponding Pulleys
DIN 7719 Part 2 – Endless Wide V-Belts for Industrial Speed Changers; Measurement of Centre Distance Variations
DIN 7721 Part 1 – Synchronous Belt Drives, Metric Pitch; Synchronous Belts
DIN 7721 Part 2 – Synchronous Belt Drives, Metric Pitch; Tooth Space Profile of Synchronous Pulleys
DIN 7722 – Endless Hexagonal Belts for Agricultural Machines and Groove Profiles of Corresponding Pulleys
DIN 7753 Part 1 – Endless Narrow V-Belts for Mechanical Engineering; Dimensions
DIN 7753 Part 2 – Endless Narrow V-Belts for Mechanical Engineering; Drive Calculation, Performance Data
DIN 7753 Part 3 – Endless Narrow V-Belts for the Automotive Industry; Dimensions
DIN 7753 Part 4 – Endless Narrow V-Belts for the Automotive Industry; Fatigue Testing
DIN 7867 – V-Ribbed Belts and Pulleys
DIN/ISO 5290 – Grooved Pulleys for Joined Narrow V-Belts; Groove Profiles 9J; 15J; 20J; 25J
DIN 22100-7 – Articles from Synthetics for Use in Underground Mines, Paragraph 5.4 – V-Belts
DIN EN 60695-11-10 – Fire Hazard Testing

ISO – International Organization for Standardization

ISO 22 – Widths of Flat Transmission Belts and Corresponding Pulleys
ISO 63 – Flat Belt Drives; Lengths
ISO 99 – Diameter of the Belt Pulleys for Flat Belts
ISO 100 – Bulging Height of the Belt Pulleys for Flat Belts
ISO 155 – Belt Pulleys; Limiting Values for Adjustment of Centre Distances
ISO 254 – Quality, Finish and Balance of Belt Pulleys
ISO 255 – Pulleys for Classical V-Belts and Narrow V-Belts; Geometric Testing of Grooves
ISO 1081 – Vocabulary from V-Belts, V-Ribbed Belts and Pulleys
ISO 1604 – Endless Speed Changer Belts and Pulleys for Mechanical Engineering
ISO 1813 – Electrical Conductivity of V-Belts, Kraftbands, V-Ribbed Belts, Wide V-Belts and Double Profile V-Belts
ISO 2230 – Please Consult DIN 7716
ISO 2790 – Narrow V-Belt Drives for the Automotive Industry; Dimensions
ISO 3410 – Endless Speed Changer Belts and Pulleys for Agricultural Machinery
ISO 4183 – Grooved Pulleys for Classical V-Belts and Narrow V-Belts
ISO 4184 – Classical V-Belts and Narrow V-Belts; Lengths
ISO 5256 – Synchronous Belt Drives; Belt Tooth Pitch Code
Part 1 MXL; XL; L; H; XH; XXH
Part 2 MXL; XXL Metric Dimensions
ISO 5287 – Narrow V-Belt Drives for the Automotive Industry; Fatigue Test
ISO 5288 – Vocabulary from Timing Belt Drives
ISO 5289 – Endless Double Profile V-Belts and Pulleys for Agricultural Machinery
ISO 5290 – Grooved Pulleys for Joined Narrow V-Belts; Profiles: 9J; 15J; 20J; 25J
ISO 5291 – Grooved Pulleys for Joined Classical V-Belts; Profiles: AJ; BJ; CJ; DJ
ISO 5292 – Industrial V-Belt Drives; Calculations of the Performance Data and Centre Distance
ISO 5295 – Timing Belts; Calculations of the Performance Data and Centre Distance – "Inch Pitch"
ISO 8370-1 – Dynamic Test to Determine Pitch Zone Location with V-Belts
ISO 8370-2 – Dynamic Test to Determine Pitch Zone Location with V-Ribbed Belts
ISO/DIS 8419 – Belt Drives; Joined Narrow V-Belts; Lengths in Effective System; 9N/J, 15N/J, 25N/J
ISO 9010 – Synchronous Belt Drives – Automotive Belts
ISO 9011 – Synchronous Belt Drives – Automotive Pulleys
ISO 9563 – Antistatic Endless Synchronous Belts; Electrical Conductibility; Characteristics and Testing Method
ISO 9980 – Belt Drives; V-Belt Pulleys, Geometric Inspection of Grooves
ISO 9981 – Belt Drives – Pulleys and V-Ribbed Belts for the Automotive Industry; PK Profile
ISO 9982 – Belt Drives; Pulleys and V-Ribbed Belts for Industrial Requirements; Geometric Data PH, PJ, PK, PL, PM
ISO 11749 – Belt Drives – V-Ribbed Belts for the Automotive Industry, Fatigue Testing
ISO 12046 – Synchronous Belt Drives – Automotive Belts – Physical Characteristics
ISO 13050 – Synchronous Belt Drives – Metric Pitch, Curvilinear Profile Systems G, H, R and S, Belts and Pulleys
ISO 17396 – Synchronous Belt Drives – Metric Pitch, Trapezoidal Profile Systems T and AT, Belts and Pulleys
ISO 19347 – Synchronous belt drives -- Imperial pitch trapezoidal profile system -- Belts and pulleys

USA

RMA/ARPM IP-20 – Classical V-Belts and Sheaves (A; B; C; D; Cross Profiles)
RMA/ARPM IP-21 – Double (Hexagonal) Belts (AA; BB; CC; DD Cross Profiles)
RMA/ARPM IP-22 – Narrow Multiple V-Belts (3V; 5V; and 8V Cross Profiles)
RMA/ARPM IP-23 – Single V-Belts (2L; 3L; 4L; and 5L Cross Profiles)
RMA/ARPM IP-24 – Synchronous Belts (MXL; XL; L; H; XH; and XXH Belt Profiles)
RMA/ARPM IP-25 – Variable Speed V-Belts (12 Cross Profiles)
RMA/ARPM IP-26 – V-Ribbed Belts (PH; PJ; PK; PL; and PM Cross Profiles)
RMA/ARPM IP-27 – Curvilinear Toothed Synchronous Belts (8M – 14M Pitches)
ASAE S 211.... – V-Belt Drives for Agricultural Machines
SAE J636b – V-Belts and Pulleys
SAE J637 – Automotive V-Belt Drives

 © ARNTZ OPTIBELT GROUP, GERMANY

DATA SHEET
FOR THE CALCULATION/CHECKING OF DRIVES

Optibelt GmbH
Corveyer Allee 15
37671 Höxter
GERMANY
T +49 (0) 5271-621
F +49 (0) 5271-976200
E info@optibelt.com
www.optibelt.com

Company

(stamp)

For test ☐ New drive ☐
For initial production ☐ Existing drive ☐
For series production ☐ Usage _____ belts/year

Fitted with:

Number	Size	Manufacturer

Prime Mover

Type (e.g. electric motor, diesel engine 3 cyl.) _____
Size of starting torque (e.g. MA = 1.8 MN) _____
Method of starting (e.g. star delta) _____
Operational hours per day _____ hours
Number of starts _____ per hour ☐ per day ☐
Rational reverses _____ per minute ☐ per hour ☐
*Power: P normal _____ kW
P maximum _____ kW
or maximum torque _____ Nm at n_1 _____ r.p.m.
*Speed n_1 _____ r.p.m.
Position of shafts: horizontal ☐ vertical ☐
angled ☐ ∢ _____ °
Maximum allowable shaft loading $S_{a\ max}$ _____ N
*Datum or outside diameter of pulley:
d_{d1} _____ mm d_{a1} _____ mm
$d_{d1\ min}$ _____ mm $d_{a1\ min}$ _____ mm
$d_{d1\ max}$ _____ mm $d_{a1\ max}$ _____ mm
Pulley face width $b_{2\ max}$ _____ mm

Driven Machine

Type (e.g. lathe, compressor) _____
Start: loaded ☐ unloaded ☐
Nature of load: constant ☐ pulsating ☐
shock ☐
Rating: P normal _____ kW
P maximum _____ kW
or maximum torque _____ Nm at n_2 _____ r.p.m.
Speed n_2 _____ r.p.m.
$n_{2\ min}$ _____ r.p.m.
$n_{2\ max}$ _____ r.p.m.
Maximum allowable shaft loading $S_{a\ max}$ _____ N
Datum or outside diameter of pulley:
d_{d2} _____ mm d_{a2} _____ mm
$d_{d2\ min}$ _____ mm $d_{a2\ min}$ _____ mm
$d_{d2\ max}$ _____ mm $d_{a2\ max}$ _____ mm
Pulley face width $b_{2\ max}$ _____ mm

Speed ratio i _____ i_{min} _____ i_{max} _____
•Centre distance a _____ mm a_{min} _____ mm a_{max} _____ mm
Tension/guide pulleys: inside ☐ in drive slack side ☐
outside ☐ in drive tight side ☐
d_d _____ mm V-pulley ☐ movable ☐ (e.g. spring loaded) _____
d_a _____ mm flat pulley ☐ fixed ☐

Operating Conditions: Ambient temperature _____ °C minimum
_____ °C maximum
Exposure to oil ☐ (e.g. oil mist, droplets) _____
water ☐ (e.g. spray) _____
acid ☐ (type, concentration, temperature) _____
dust ☐ (type) _____

* required
• optional

Special conditions: Where the drive is subjected to unusual conditions, e.g. inside or outside idler pulleys, 3- or multi-pulley drives, as well as drives with reverse rotational direction, drawings are required. Please use the back of this data sheet for sketches.

Details about the drive:

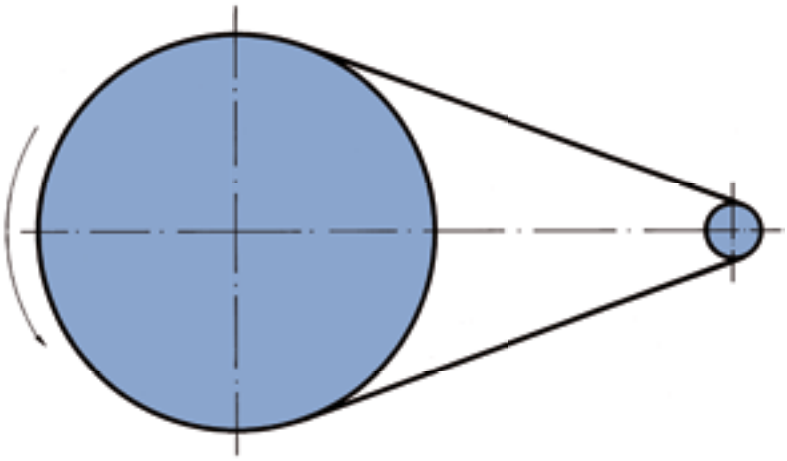

 © ARNTZ OPTIBELT GROUP, GERMANY

DATA SHEET
FOR THE CALCULATION/CHECKING OF CONVEYOR SYSTEMS

Optibelt GmbH
Corveyer Allee 15
37671 Höxter
GERMANY
T +49 (0) 5271-621
F +49 (0) 5271-976200
E info@optibelt.com
www.optibelt.com

Company

(stamp)

For one off use ☐ New drive ☐
For series production ☐ Existing drive ☐
Usage _____ belts/year

Fitted with:

Number	Section/Length	Top surface	Manufacturer

Prime Mover

Type (e.g. geared motor) _____
Size of starting torque (e.g. MA = 1.8 MN) _____
Method of starting (e.g. star delta) _____
Start under load ☐ unloaded ☐
Operational hours per day _____ _____ hours
Number of starts _____ per hour ☐ per day ☐
Power: P normal _____ kW
P maximum _____ kW
or maximum torque _____ Nm at n_1 _____ r.p.m.
Rotational speed n_1 _____ r.p.m.
Rotational speed n_2 _____ r.p.m.
Conveying speed min. _____ m/min
max. _____ m/min
Continuously variable yes ☐ no ☐
Maximum allowable shaft loading $S_{a\ max}$ _____ N
Datum or outside diameter of the driver pulley:
d_{d1} _____ mm d_{a1} _____ mm
$d_{d1\ min}$ _____ mm $d_{a1\ min}$ _____ mm
$d_{d1\ max}$ _____ mm $d_{a1\ max}$ _____ mm
Datum or outside diameter of the guide pulleys:
d_{d2} _____ mm d_{a2} _____ mm
$d_{d2\ min}$ _____ mm $d_{a2\ min}$ _____ mm
$d_{d2\ max}$ _____ mm $d_{a2\ max}$ _____ mm
Speed ratio i _____ i_{min} _____ i_{max} _____
Position of shafts: horizontal ☐ vertical ☐
angled ☐ ∢ _____ °
Overall width of the system _____ mm
Drive centre distance a _____ mm a_{min} _____ mm a_{max} _____ mm
Allowance for tensioning – _____ mm + _____ mm
Tension/guide pulleys: inside ☐ outside ☐
d_d _____ mm d_a _____ mm

Supporting pulleys V-pulleys ☐ flat pulleys ☐
Bearings plain ☐ ball ☐
Number _____ pieces
d_d _____ mm d_a _____ mm
Spacing t _____ pieces
Support rails flat ☐ V-grooved ☐
Material (e.g. steel, plastic) _____

Conveyed Material

Type (e.g. concrete slabs) _____
Condition of the corners round ☐ sharp ☐
Conditions of the contact surface rough ☐ smooth ☐
Conveyed horizontally ☐ vertically ☐
inclined ☐ ∢ _____ °
downwards ☐ upwards ☐
Dimensions l x w x h [mm] _____ x _____ x _____
Motion continuous ☐ cycled ☐
collected ☐

Operating Conditions

Ambient temperature _____ °C minimum
_____ °C maximum
Exposure to oil ☐ (e.g. oil mist) _____
water ☐ (e.g. spray) _____
acid ☐ (type, concentration, temperature) _____
dust ☐ (type) _____
In the open air yes ☐ no ☐

The back of this data sheet is provided for sketches of the drive arrangement. Please include the dimensions of all the pulleys and idlers used in the proposed design.

Details about the conveyor system:

Holder of all copyright and related rights including all rights of use and exploitation: Arntz Optibelt Group, Höxter, Germany. No part of this publication may be used, exploited, reproduced or transmitted to third parties in any form without the prior permission of the Arntz Optibelt Group, Höxter, Germany. Any infringement will be prosecuted under the copyright act law.

The products on offer provided by Optibelt are exclusively oriented towards specialised trade and not towards the consumer. Optibelt recommends that its products are to be exclusively used in accordance with the information provided in Optibelt documentation. The use of Optibelt products in aeroplanes or aviation systems, products and/or applications is not permitted. If in doubt, consult Optibelt before using any Optibelt products. Optibelts does not accept any liability for the use of Optibelt products in systems, products and/or applications for which they were not designed and/or manufactured. This is particularly, but not exclusively, the case if Optibelt products are to be used outside of any specific agreement with Optibelt in circumstances which are unusual or which present a particular risk to health, safety or the environment, or which require a more demanding use.

Errors and omissions excepted. Optibelt does not accept any liability for the correctness or completeness of the information supplied by Optibelt or for the suitability of the information for use by the recipient of the information. Optibelt does not therefore, as far as permitted by law, accept liability for damage resulting outside of any specific agreement with Optibelt from the use of the information or the assumption that the information is correct and complete.

The general terms and conditions of sale of Optibelt GmbH, Höxter, Germany, in particular the agreements relating to retention of title, including in their longer and extended form, shall apply exclusively. These terms and conditions can be obtained free of charge by visiting http://www.optibelt.de/agb/de. Optibelt shall not accept any of the customer's own terms and conditions that are contrary to or deviate from these terms and conditions, even if Optibelt does not explicitly object to them or unconditionally renders performance or accepts the performance by the customer irrespective of the customer's conflicting or differing terms of business.

Print: 0716

Optibelt GmbH
Corveyer Allee 15
37671 Höxter
GERMANY

T +49 (0) 5271-621
F +49 (0) 5271-976200
E info@optibelt.com

ENTER NOW
www.optibelt.com

www.optibelt.com